

SERVICE PUBLICITY

苏州鑫恒鑫电机有限公司

FAN MANUFACTURING EXPERT

FANOVA(SUZHOU) MOTOR TECHNOLOGY CO., LTD

公司简介 COMPANY PROFILE



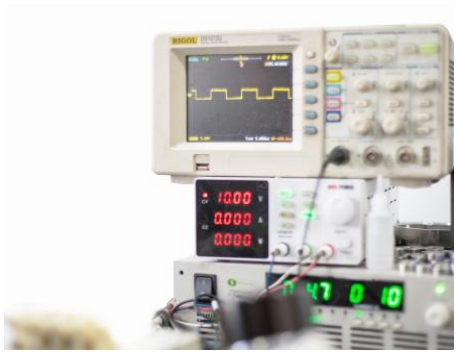











EC-AC Series



EC Backward Centrifugal Fans D133

– 材料**Material:** 塑料风轮Impeller: Plastic
转子 Rotor: 电泳Electrophoresis
端盖 Electronics housing: 压铸铝Die-cast aluminium
– 叶片数量**Number of blades:** 7
– 防护等级**Degree of protection:** IP 44
– 绝缘等级**Insulation class:** B
– 安装位置**Installation position:** 任意Any
– 模式**Mode:**连续工作制 Continuous operation (S1)

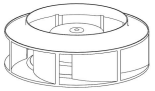	电机 **Motor**	曲线 **Curve**	额定电压 **Nominal Voltage**	额定电压范围 **Nominal Voltage Range**	频率 **Frequency**	电流 **Current**	转速 **Speed**	输入功率 **Max. input Power**
Type			VAC	VAC	Hz	A	RPM	W
FB3G133-2APL-50	BLEC53	Ⓐ	230	184~270	50/60	0.15	3200	18
FB3G133-2APL-51	BLEC53	Ⓑ	230	184~270	50/60	0.26	3900	37
FB3G133-2APL-70	BLEC72	Ⓒ	230	184~270	50/60	0.35	4500	48

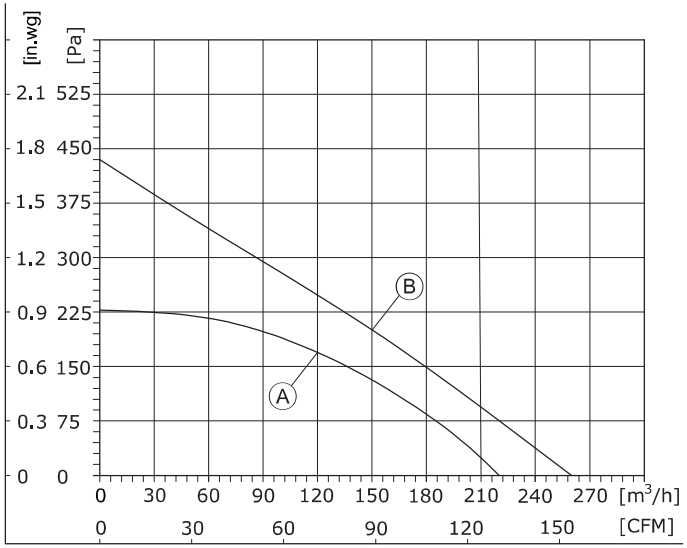

1、Air performance measured according to: ISO 5801, with DJ inlet ring without contact protection.
2、Intake-side sound level: LpA measured at 1 m distance from fan axis. The values given are only applicable under the specifi ed measuring conditions and may differ depending on the installation conditions.

EC Backward Centrifugal Fans D133

– 旋转方向**Direction of rotation:** 正转，从转子方向Clockwise，viewed toward rotor
– 技术特性**Technical features:** 参见附图See connection diagram
– 泄漏电流**Touch curren:** < 3,5 mA
– 能效**Efficiency:** ErP2015
– 标准/证书**Valid For Approval/Standard**：CE,RoHS,ISO9001
环境温度**Perm. ambient temp.**：.-25℃~+60℃
– 安装**Mounting:** 免维护滚珠轴承Maintenance-free ball bearings

噪音等级 **Sound Pressure Level**	风量 **Air Flow**	风压 **Air Pressure**	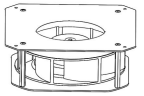	速度控制 **Speed Control**	接线图 **Wiring Mode**
dB(A)	m³/h	Pa	with support bracket		
58.9	219	228	FK3G133-2APL-50	0-10VDC PWM	F1
62	259	433	FK3G133-2APL-51		F1
67.8	450	433	FK3G133-2APL-70		F1

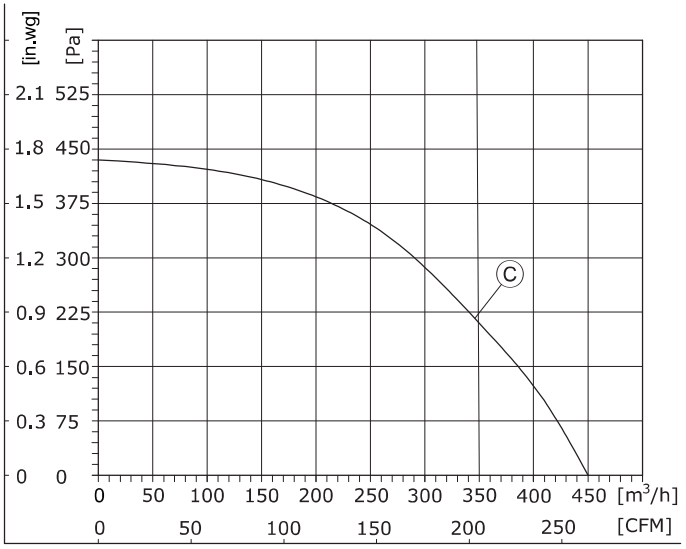

1、Air performance measured according to: ISO 5801, with DJ inlet ring without contact protection.
2、Intake-side sound level: LpA measured at 1 m distance from fan axis. The values given are only applicable under the specifi ed measuring conditions and may differ depending on the installation conditions.

(后向离心风机Centrifugal Fan)
FB3G133-2APL-50

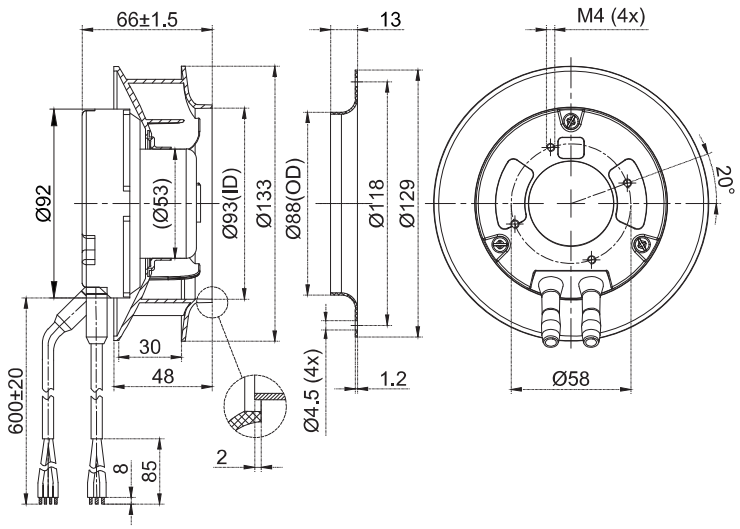

(支架离心风机Centrifugal Fan With Support Bracket)
FK3G133-2APL-50

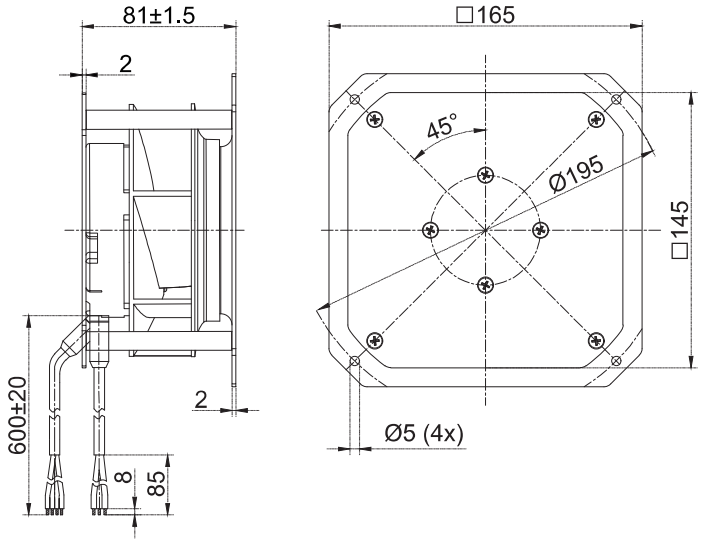

(后向离心风机Centrifugal Fan)
FB3G133-2APL-51

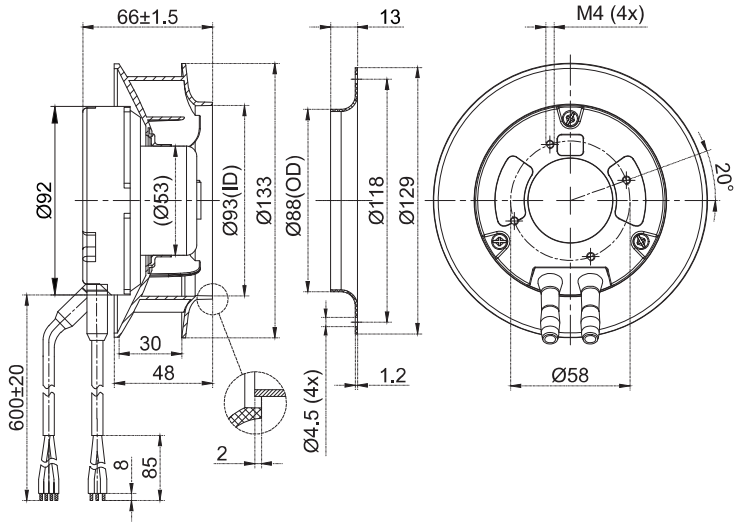

(支架离心风机Centrifugal Fan With Support Bracket)
FK3G133-2APL-51

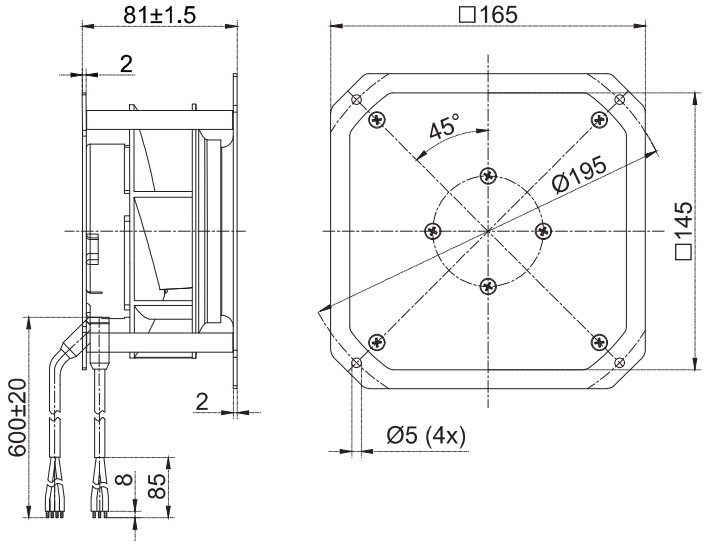

(后向离心风机Centrifugal Fan)
FB3G133-2APL-70

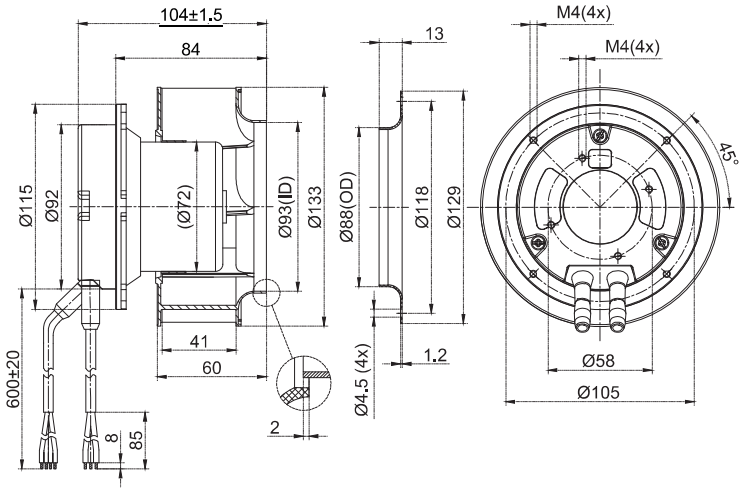

(支架离心风机Centrifugal Fan With Support Bracket)
FK3G133-2APL-70

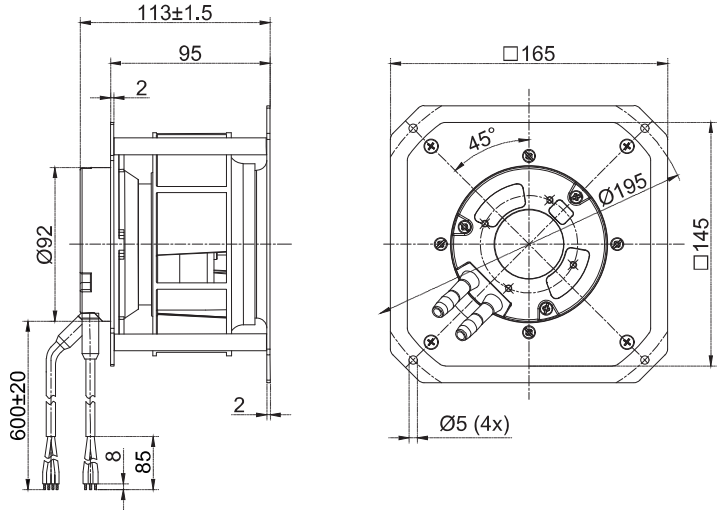

EC Centrifugal Fan



EC Backward Centrifugal Fans D175

– 材料**Material:** 塑料风轮Impeller: Plastic
转子 Rotor: 电泳Electrophoresis
端盖 Electronics housing: 压铸铝Die-cast aluminium
– 叶片数量**Number of blades:** 7
– 防护等级**Degree of protection:** IP 44
– 绝缘等级**Insulation class:** B
– 安装位置**Installation position:** 任意Any
– 模式**Mode:**连续工作制 Continuous operation (S1)

	电机 Motor	曲线 Curve	额定电压 Nominal Voltage	额定电压范围 Nominal Voltage Range	频率 Frequency	电流 Current	转速 Speed	输入功率 Max. input Power
Type			VAC	VAC	Hz	A	RPM	W
FB3G175-2APL-70	BLEC72	Ⓐ	230	184~270	50/60	0.8	4450	105
FB3G175-2APY-76	BLEC72	Ⓑ	230	184~270	50/60	0.3	3300	44
FB3G175-2APY-70	BLEC72	Ⓒ	230	184~270	50/60	0.5	4200	85

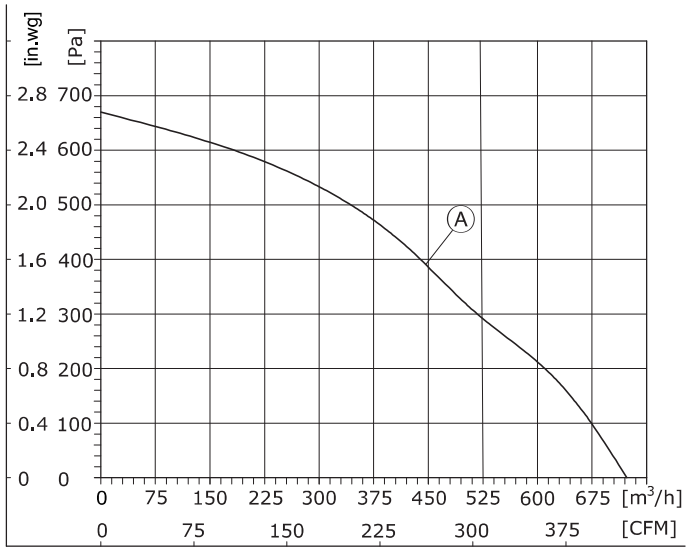

1、Air performance measured according to: ISO 5801, with DJ inlet ring without contact protection.
2、Intake-side sound level: LpA measured at 1 m distance from fan axis. The values given are only applicable under the specifi ed measuring conditions and may differ depending on the installation conditions.

EC Backward Centrifugal Fans D175

– 旋转方向**Direction of rotation:** 正转，从转子方向Clockwise，viewed toward rotor
– 技术特性**Technical features:** 参见附图See connection diagram
– 泄漏电流**Touch curren:** < 3,5 mA
– 能效**Efficiency:** ErP2015
– 标准/证书**Valid For Approval/Standard**：CE,RoHS,ISO9001
环境温度**Perm. ambient temp.**：**.**-25℃~+60℃
– 安装**Mounting:** 免维护滚珠轴承Maintenance-free ball bearings

噪音等级 Sound pressure level	风量 Air Flow	风压 Air pressure	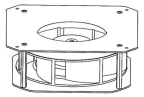	速度控制 Speed Control	接线图 Wiring Mode
dB(A)	m³/h	Pa	with support bracket		
76.4	723	667	FK3G175-2APL-70	0-10VDC PWM	F1
68	615	492	FK3G175-2APY-76		F1
78.2	750	670	FK3G175-2APY-70		F1

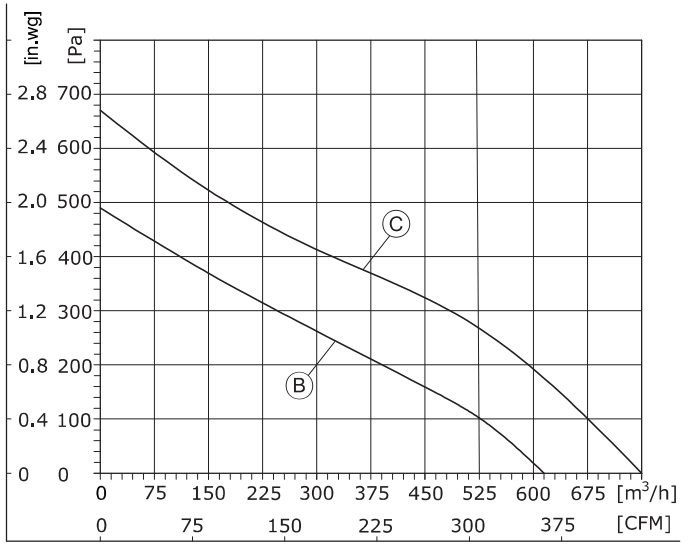

1、Air performance measured according to: ISO 5801, with DJ inlet ring without contact protection.
2、Intake-side sound level: LpA measured at 1 m distance from fan axis. The values given are only applicable under the specifi ed measuring conditions and may differ depending on the installation conditions.

(后向离心风机Centrifugal Fan)
FB3G175-2APL-70

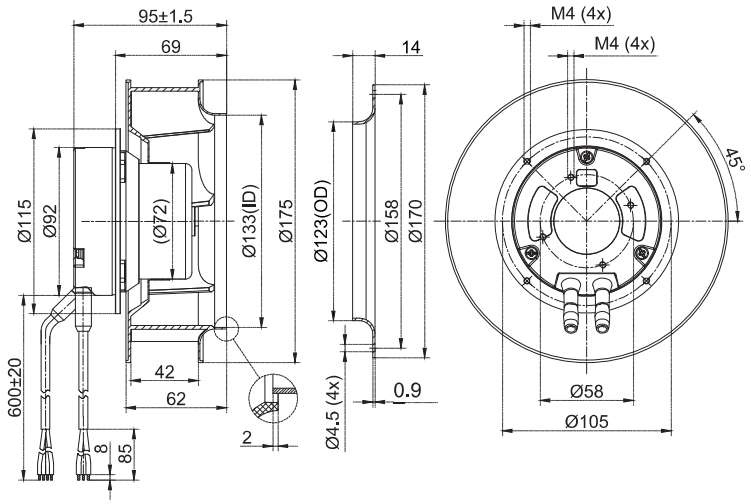

(后向离心风机Centrifugal Fan)
FB3G175-2APY-76

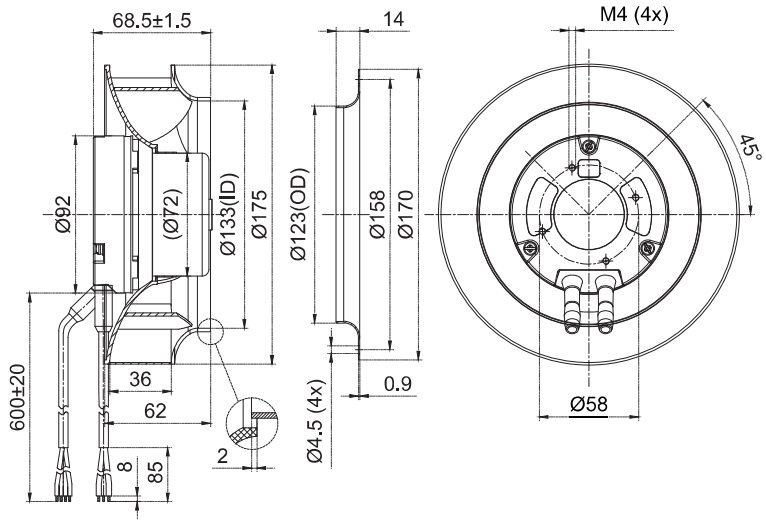

(支架离心风机Centrifugal Fan With Support Bracket)
FK3G175-2APL-70

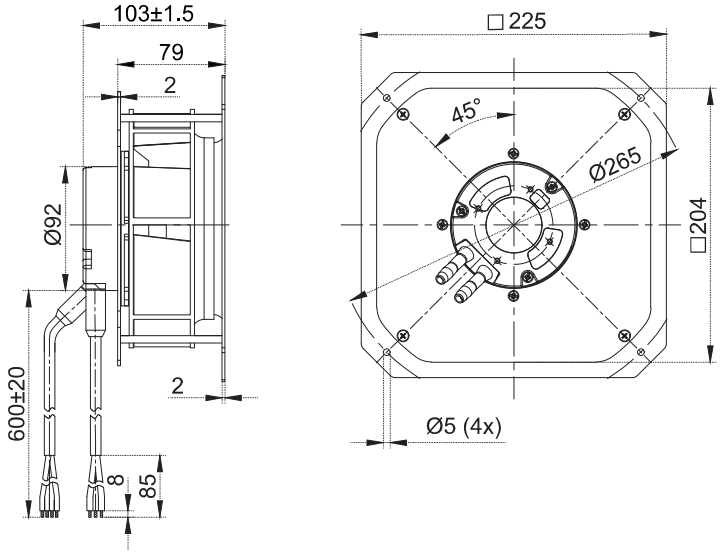

(支架离心风机Centrifugal Fan With Support Bracket)
FK3G175-2APY-76

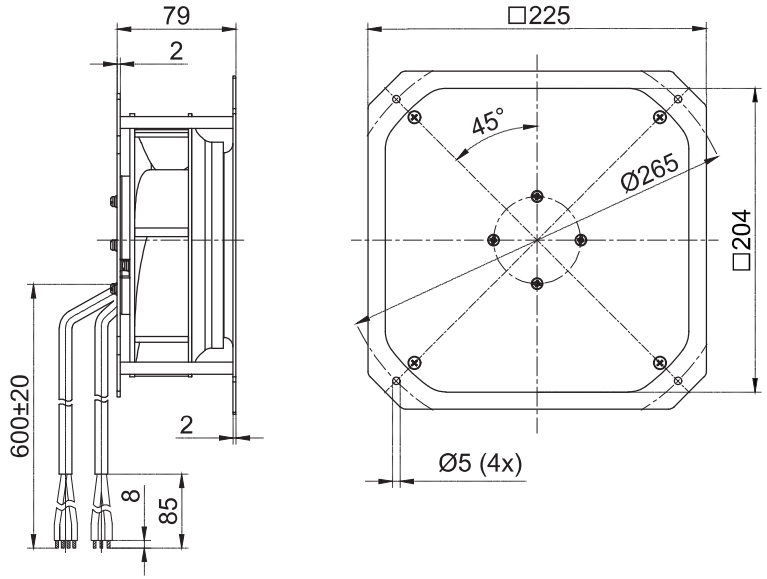

(后向离心风机Centrifugal Fan)
FB3G175-2APY-70

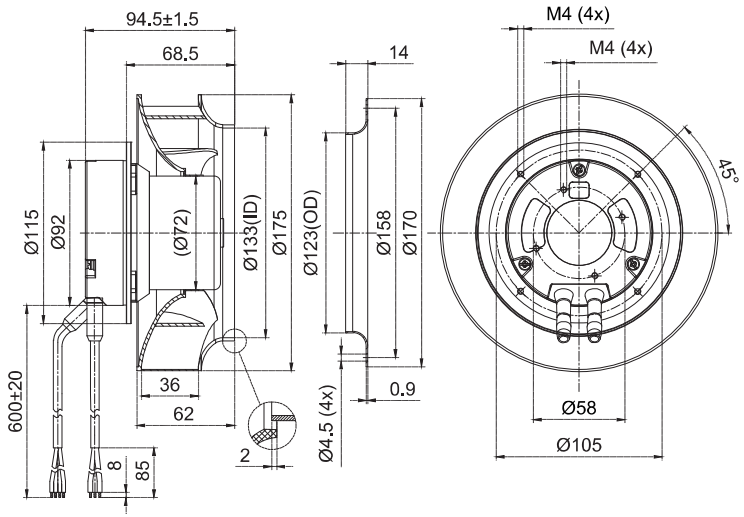

(支架离心风机Centrifugal Fan With Support Bracket)
FK3G175-2APY-70

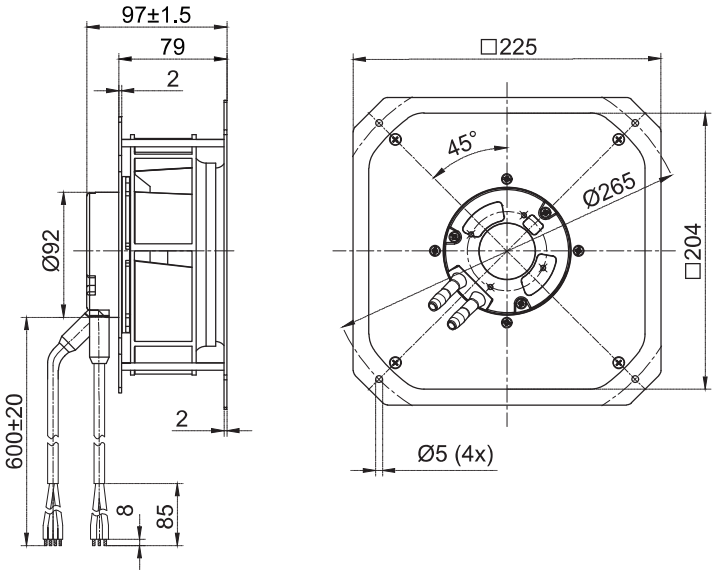

EC Centrifugal Fan



EC Backward Centrifugal Fans D190

– 材料**Material:** 塑料风轮Impeller: Plastic
转子 Rotor: 电泳Electrophoresis
端盖 Electronics housing: 压铸铝Die-cast aluminium
– 叶片数量**Number of blades:** 7
– 防护等级**Degree of protection:** IP 44
– 绝缘等级**Insulation class:** B
– 安装位置**Installation position:**任意 Any
– 模式**Mode:**连续工作制 Continuous operation (S1)

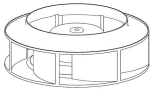	电机 **Motor**	曲线 **Curve**	额定电压 **Nominal Voltage**	额定电压范围 **Nominal Voltage Range**	频率 **Frequency**	电流 **Current**	转速 **Speed**	输入功率 **Max. input Power**
Type			VAC	VAC	Hz	A	RPM	W
FB3G190-2APY-70	BLEC72	Ⓐ	230	184~270	50/60	0.55	3100	85
FB3G190-2APY-76	BLEC72	Ⓐ	230	184~270	50/60	0.55	3100	85
FB3G190-2APY-71	BLEC72	Ⓑ	230	184~270	50/60	0.7	3550	93
FB3G190-2APS-90	BLEC92	Ⓒ	230	184~270	50/60	1.2	4250	170

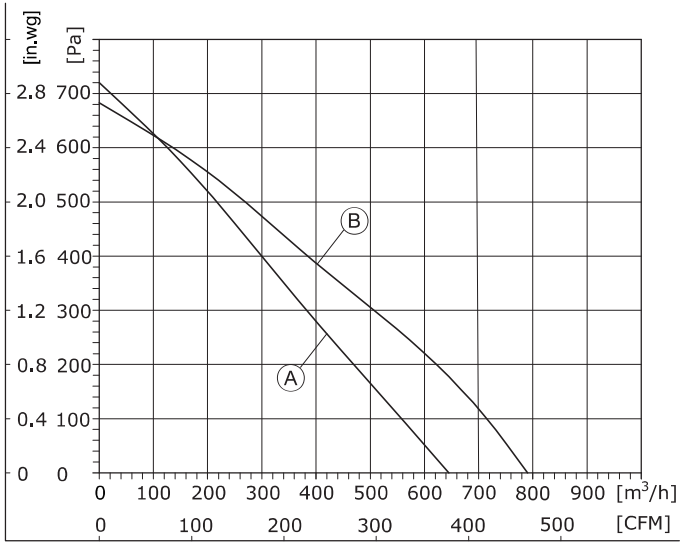

1、Air performance measured according to: ISO 5801, with DJ inlet ring without contact protection.
2、Intake-side sound level: LpA measured at 1 m distance from fan axis. The values given are only applicable under the specifi ed measuring conditions and may differ depending on the installation conditions.

EC Backward Centrifugal Fans D190

– 旋转方向**Direction of rotation:** 正转，从转子方向Clockwise，viewed toward rotor
– 技术特性**Technical features:** 参见附图See connection diagram
– 泄漏电流**Touch curren:** < 3,5 mA
– 能效**Efficiency:** ErP2015
– 标准/证书**Valid For Approval/Standard**：CE,RoHS,ISO9001
环境温度**Perm. ambient temp.**：.-25℃~+60℃
– 安装**Mounting:** 免维护滚珠轴承Maintenance-free ball bearings

噪音等级 **Sound Pressure Level**	风量 **Air Flow**	风压 **Air pressure**	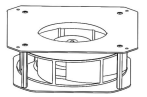	速度控制 **Speed Control**	接线图 **Wiring Mode**
dB(A)	m³/h	Pa	with support bracket		
70	645	720	FK3G190-2APY-70	0-10VDC PWM	F1
70	645	720	FK3G190-2APY-76		F1
72	790	685	FK3G190-2APY-71		F1
74	785	890	FK3G190-2APS-90		F2

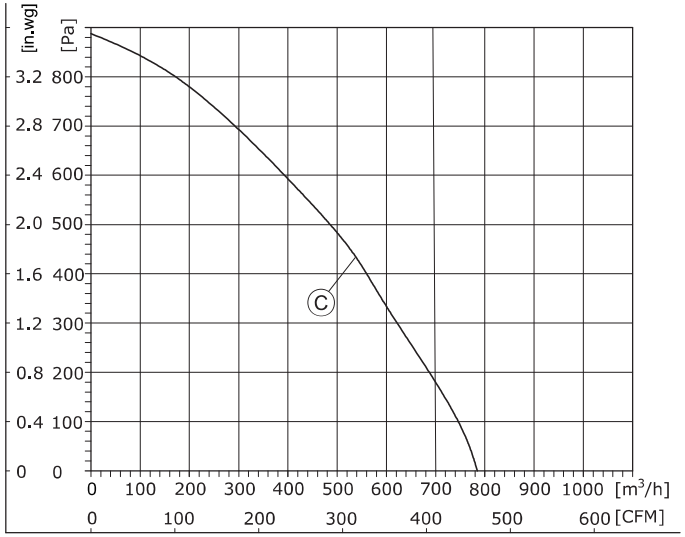

1、Air performance measured according to: ISO 5801, with DJ inlet ring without contact protection.
2、Intake-side sound level: LpA measured at 1 m distance from fan axis. The values given are only applicable under the specifi ed measuring conditions and may differ depending on the installation conditions.

(后向离心风机Centrifugal Fan)
FB3G190-2APY-70

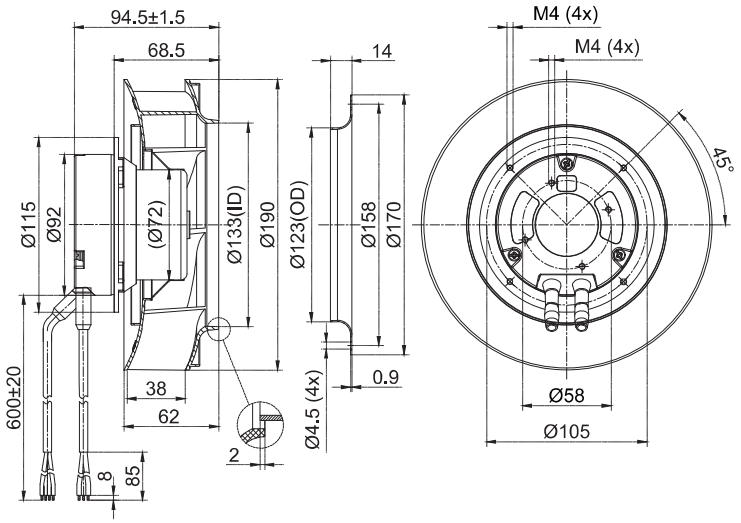

(后向离心风机Centrifugal Fan)
FB3G190-2APY-76

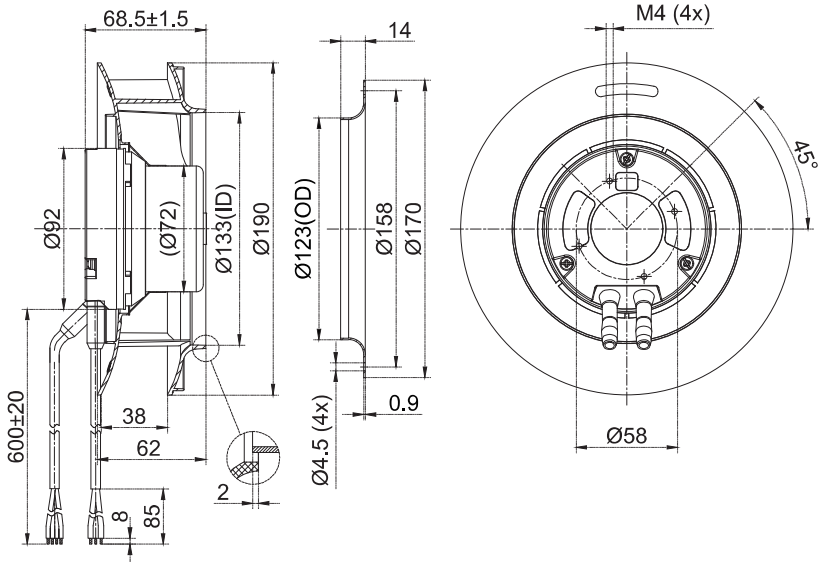

(支架离心风机Centrifugal Fan With Support Bracket)
FK3G190-2APY-70

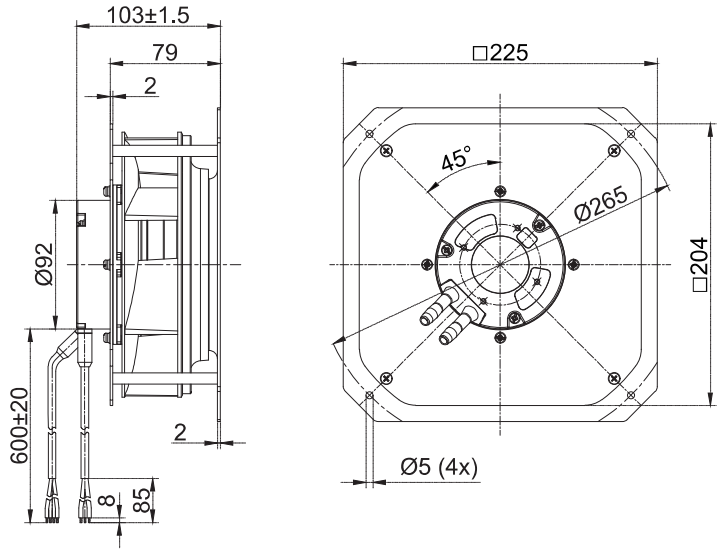

(支架离心风机Centrifugal Fan With Support Bracket)
FK3G190-2APY-76

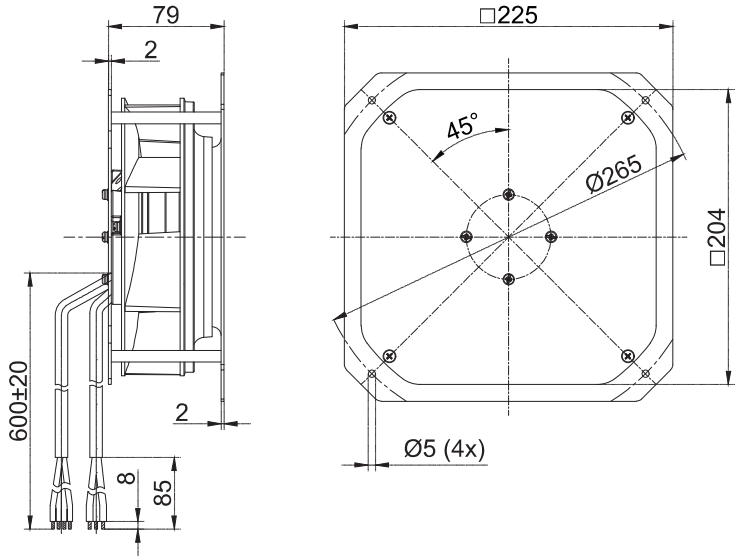

(后向离心风机Centrifugal Fan)
FB3G190-2APY-71

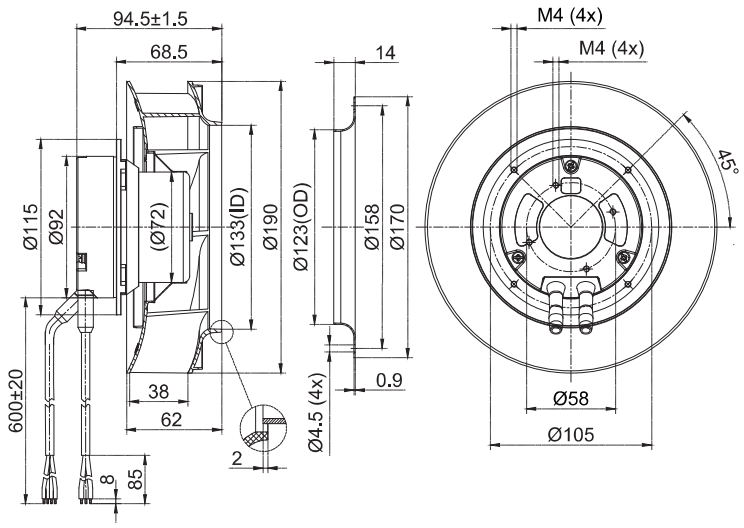

(后向离心风机Centrifugal Fan)
FB3G190-2APS-90

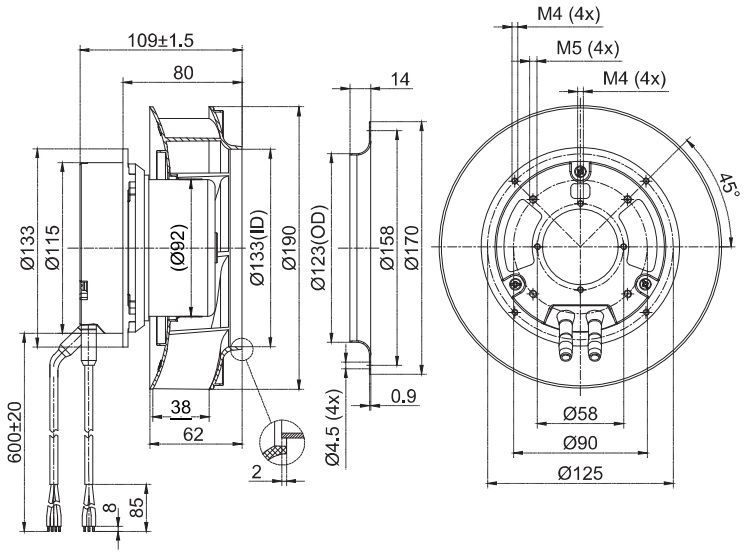

(支架离心风机Centrifugal Fan With Support Bracket)
FK3G190-2APY-71

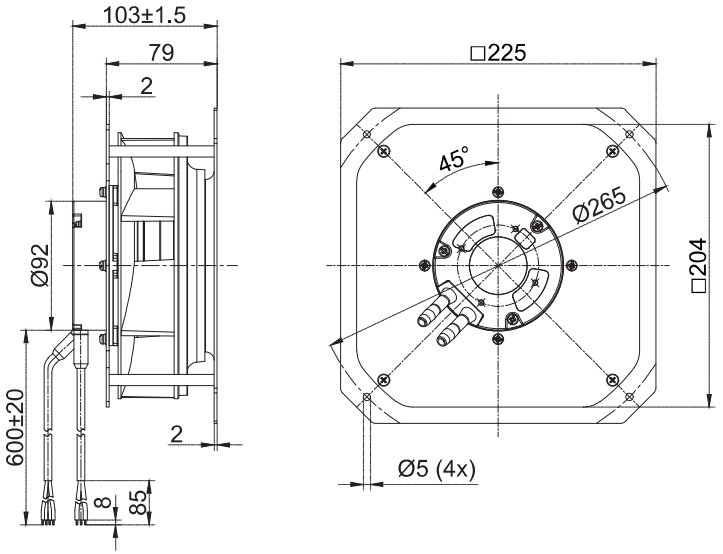

(支架离心风机Centrifugal Fan With Support Bracket)
FK3G190-2APS-90

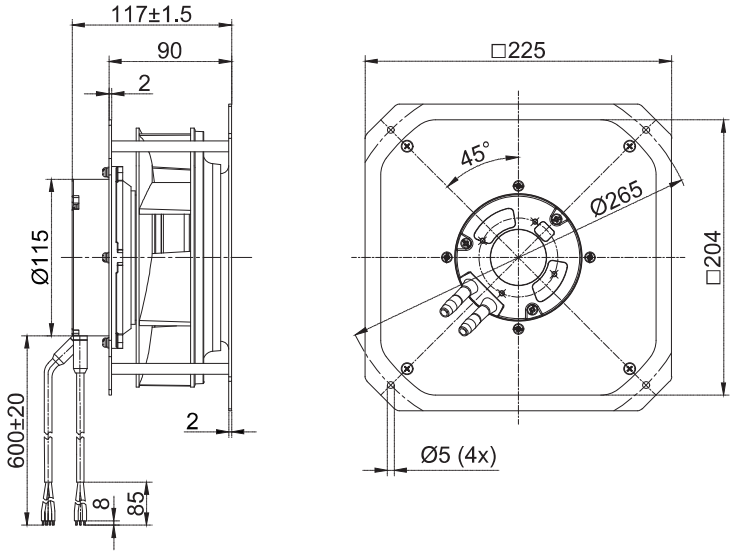



EC Backward Centrifugal Fans D220

– 材料**Material:** 塑料风轮Impeller: Plastic
转子 Rotor: 电泳Electrophoresis
端盖 Electronics housing: 压铸铝Die-cast aluminium
– 叶片数量**Number of blades:** 7
– 防护等级**Degree of protection:** IP 44
– 绝缘等级**Insulation class:** B
– 安装位置**Installation position:** 任意Any
– 模式**Mode:**连续工作制 Continuous operation (S1)

	电机 **Motor**	曲线 **Curve**	额定电压 **Nominal Voltage**	额定电压范围 **Nominal Voltage Range**	频率 **Frequency**	电流 **Current**	转速 **Speed**	输入功率 **Max. input Power**
Type			VAC	VAC	Hz	A	RPM	W
FB3G220-2APY-70	BLEC72	Ⓐ	230	184~270	50/60	0.8	3050	95
FB3G220-2APY-90	BLEC92	Ⓑ	230	184~270	50/60	1.2	3600	170

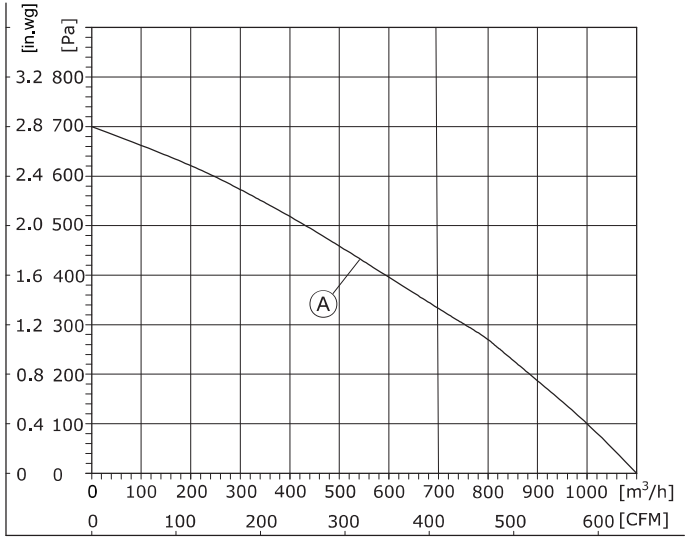

1、Air performance measured according to: ISO 5801, with DJ inlet ring without contact protection.
2、Intake-side sound level: LpA measured at 1 m distance from fan axis. The values given are only applicable under the specifi ed measuring conditions and may differ depending on the installation conditions.

EC Centrifugal Fan

EC Backward Centrifugal Fans D220

– 旋转方向**Direction of rotation:** 正转，从转子方向Clockwise，viewed toward rotor
– 技术特性**Technical features:** 参见附图See connection diagram
– 泄漏电流**Touch curren:** < 3,5 mA
– 能效**Efficiency:** ErP2015
– 标准/证书**Valid For Approval/Standard**：CE,RoHS,ISO9001
环境温度**Perm. ambient temp.**：.-25℃~+60℃
– 安装**Mounting:** 免维护滚珠轴承Maintenance-free ball bearings

噪音等级 **Sound Pressure Level**	风量 **Air Flow**	风压 **Air Pressure**	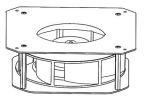	速度控制 **Speed Control**	接线图 **Wiring Mode**
dB(A)	m³/h	Pa	with support bracket		
71	1100	700	FK3G220-2APY-70	0-10VDC PWM Modbus485	F1
74	1100	840	FK3G220-2APY-90		F2

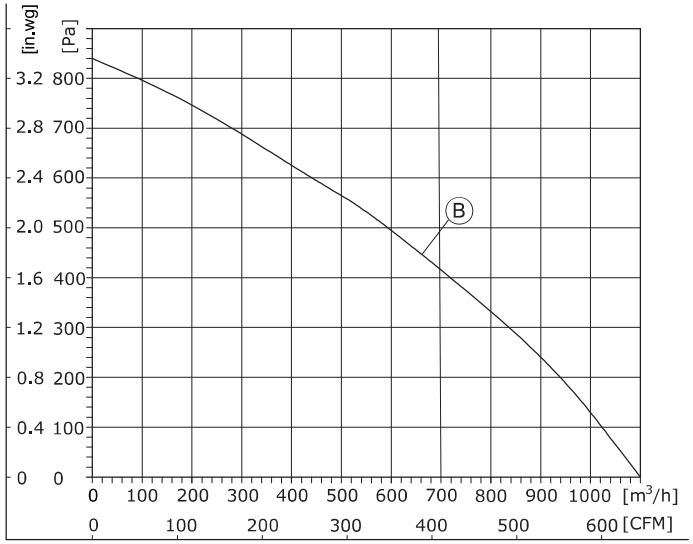

1、Air performance measured according to: ISO 5801, with DJ inlet ring without contact protection.
2、Intake-side sound level: LpA measured at 1 m distance from fan axis. The values given are only applicable under the specifi ed measuring conditions and may differ depending on the installation conditions.

(后向离心风机Centrifugal Fan)
FB3G220-2APY-70

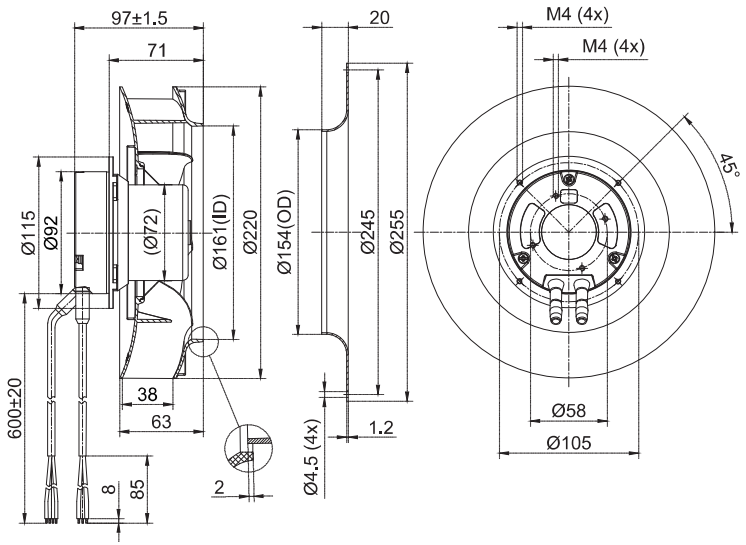

(后向离心风机Centrifugal Fan)
FB3G220-2APY-90

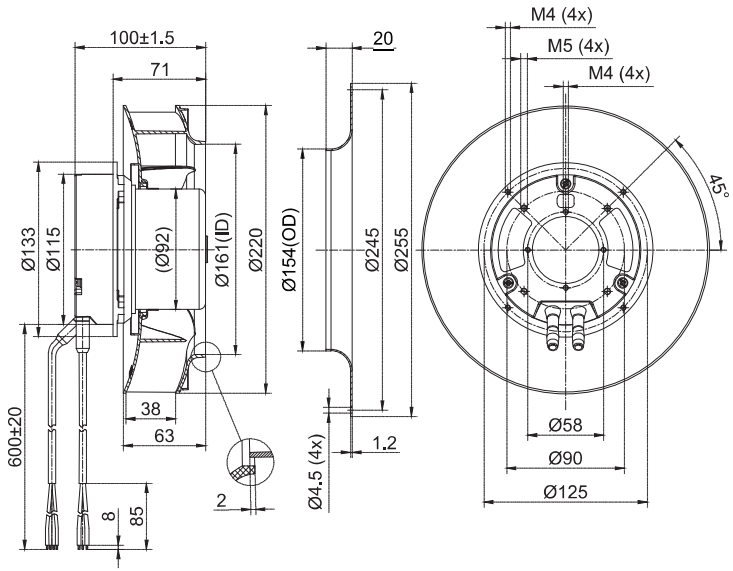

(支架离心风机Centrifugal Fan With Support Bracket)
FK3G220-2APL-70

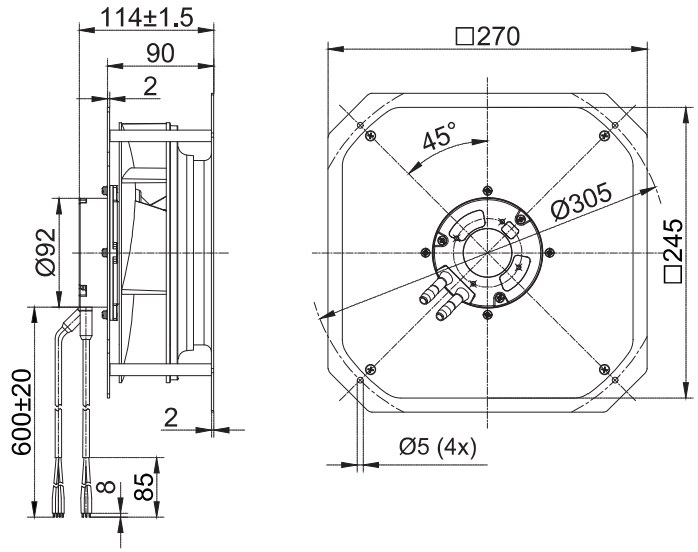

(支架离心风机Centrifugal Fan With Support Bracket)
FK3G220-2APY-90

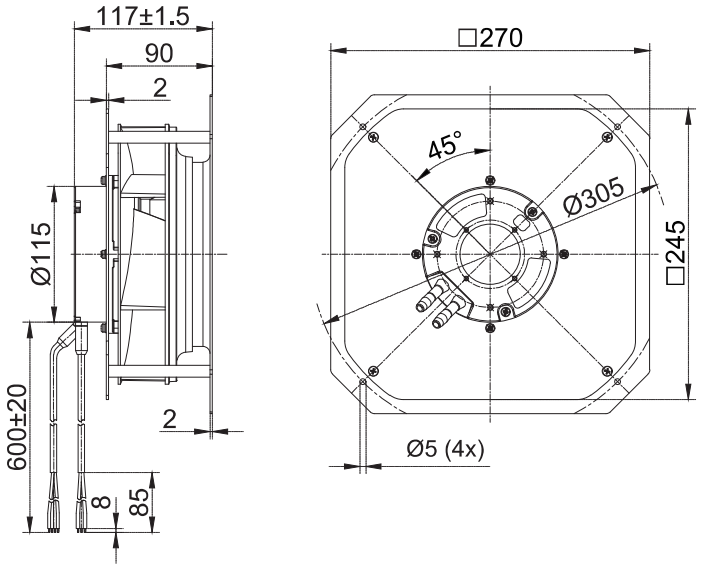



EC Backward Centrifugal Fans D225

– 材料**Material:** 塑料风轮Impeller: Plastic
转子 Rotor: 电泳Electrophoresis
端盖 Electronics housing: 压铸铝Die-cast aluminium
– 叶片数量**Number of blades:** 7
– 防护等级**Degree of protection:** IP 44
– 绝缘等级**Insulation class:** B
– 安装位置**Installation position:**任意 Any
– 模式**Mode:**连续工作制 Continuous operation (S1)

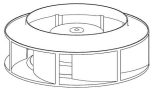	电机 **Motor**	曲线 **Curve**	额定电压 **Nominal Voltage**	额定电压范围 **Nominal Voltage Range**	频率 **Frequency**	电流 **Current**	转速 **Speed**	输入功率 **Max. input Power**
Type			VAC	VAC	Hz	A	RPM	W
FB3G225-2APY-70	BLEC72	Ⓐ	230	184~270	50/60	0.72	2500	120
FB3G225-2APY-90	BLEC92	Ⓑ	230	184~270	50/60	0.95	2700	150
FB3G225-2APY-96	BLEC92	Ⓒ	230	184~270	50/60	1.6	3400	220

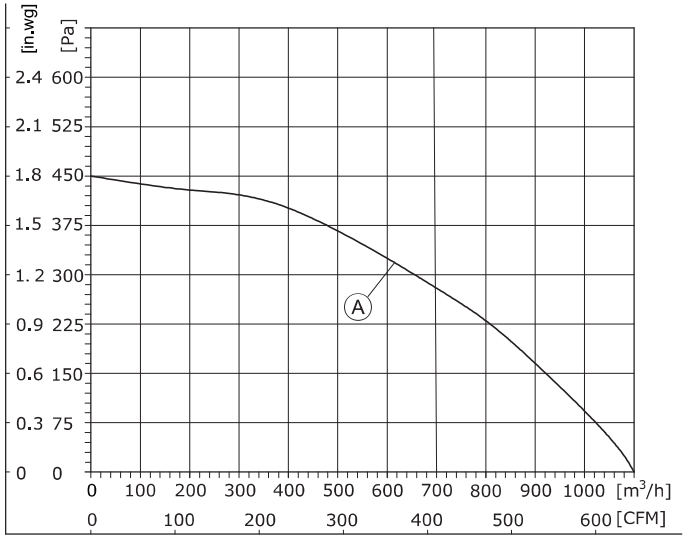

1、Air performance measured according to: ISO 5801, with DJ inlet ring without contact protection.
2、Intake-side sound level: LpA measured at 1 m distance from fan axis. The values given are only applicable under the specifi ed measuring conditions and may differ depending on the installation conditions.

EC Backward Centrifugal Fans D225

– 旋转方向**Direction of rotation:** 正转，从转子方向Clockwise，viewed toward rotor
– 技术特性**Technical features:** 参见附图See connection diagram
– 泄漏电流**Touch curren:** < 3,5 mA
– 能效**Efficiency:** ErP2015
– 标准/证书**Valid For Approval/Standard**：CE,RoHS,ISO9001
环境温度**Perm. ambient temp.**：.-25℃~+60℃
– 安装**Mounting:** 免维护滚珠轴承Maintenance-free ball bearings

噪音等级 **Sound pressure level**	风量 **Air Flow**	风压 **Air pressure**	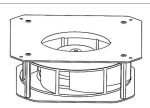	速度控制 **Speed Control**	接线图 **Wiring Mode**
dB(A)	m³/h	Pa	with support bracket	0-10VDC PWM Modbus485	
71	1098	447	FK3G225-2APY-70		F1
73	1202	514	FK3G225-2APY-90		F2
74	1350	900	FK3G225-2APY-96		F2

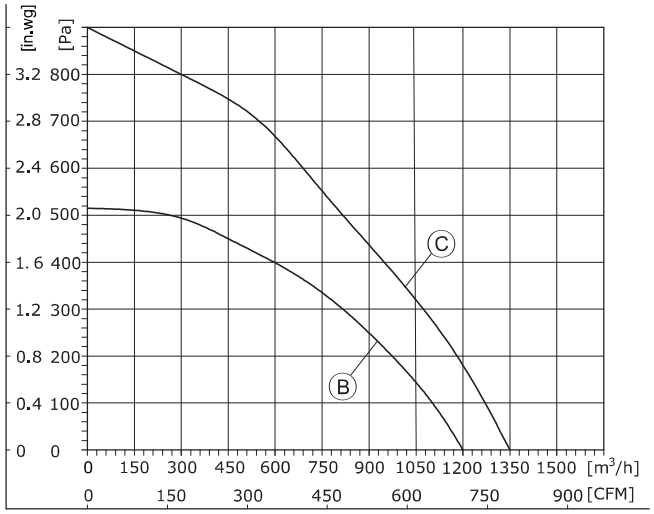

1、Air performance measured according to: ISO 5801, with DJ inlet ring without contact protection.
2、Intake-side sound level: LpA measured at 1 m distance from fan axis. The values given are only applicable under the specifi ed measuring conditions and may differ depending on the installation conditions.

(后向离心风机Centrifugal Fan)
FB3G225-2APY-70

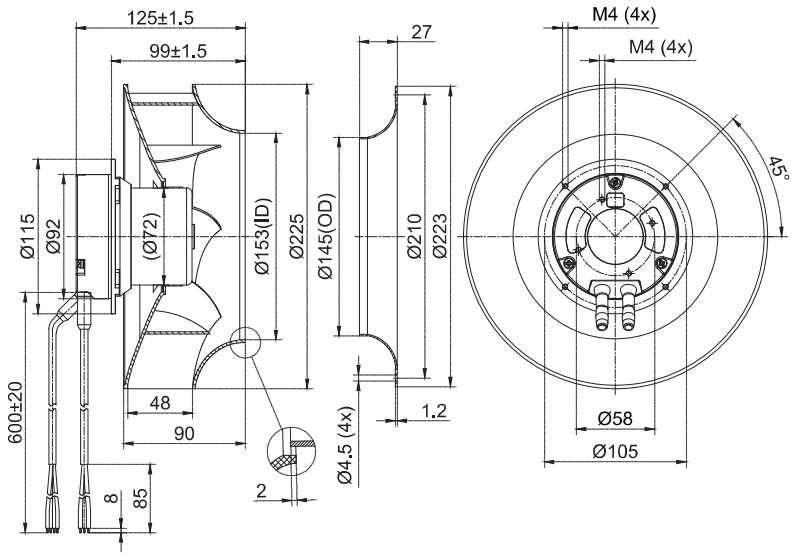

(后向离心风机Centrifugal Fan)
FB3G225-2APY-90

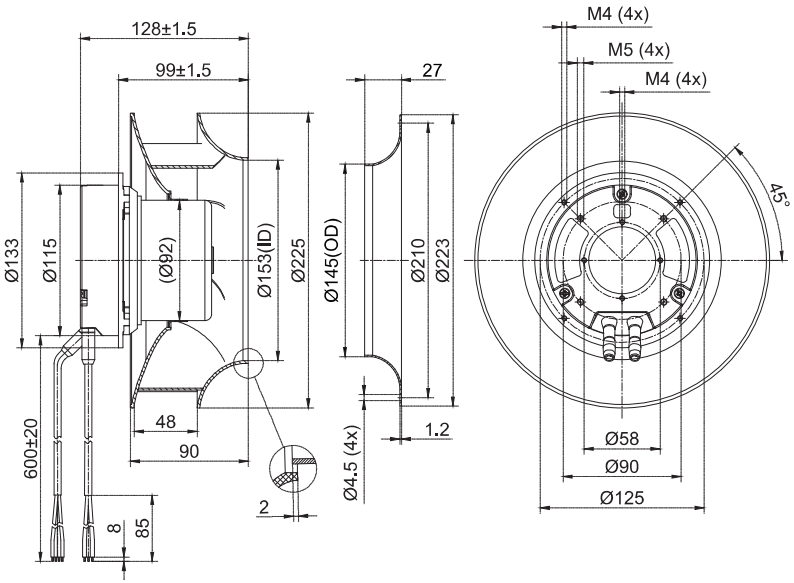

(支架离心风机Centrifugal Fan With Support Bracket)
FK3G225-2APY-70

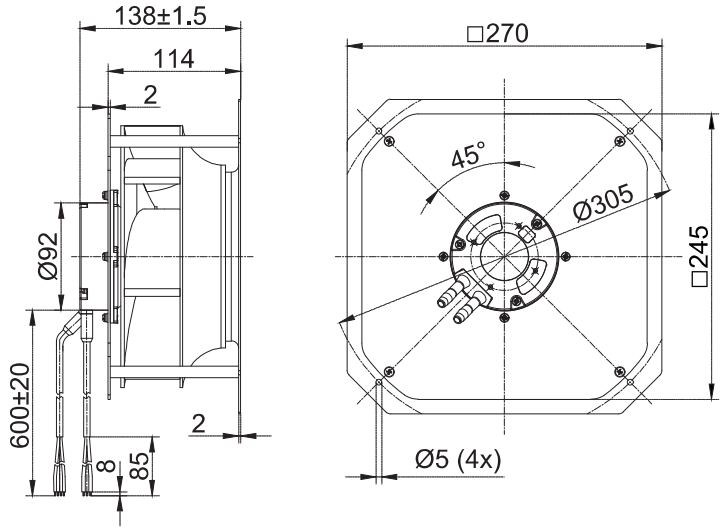

(支架离心风机Centrifugal Fan With Support Bracket)
FK3G225-2APY-90

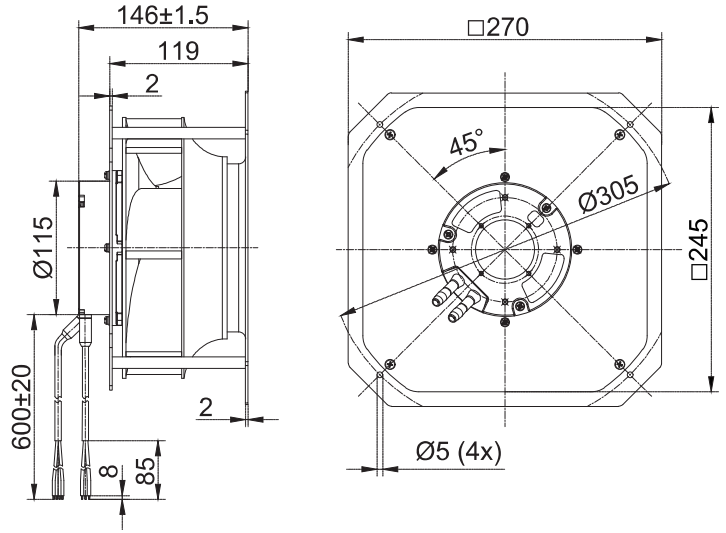

(后向离心风机Centrifugal Fan)
FB3G225-2APY-96

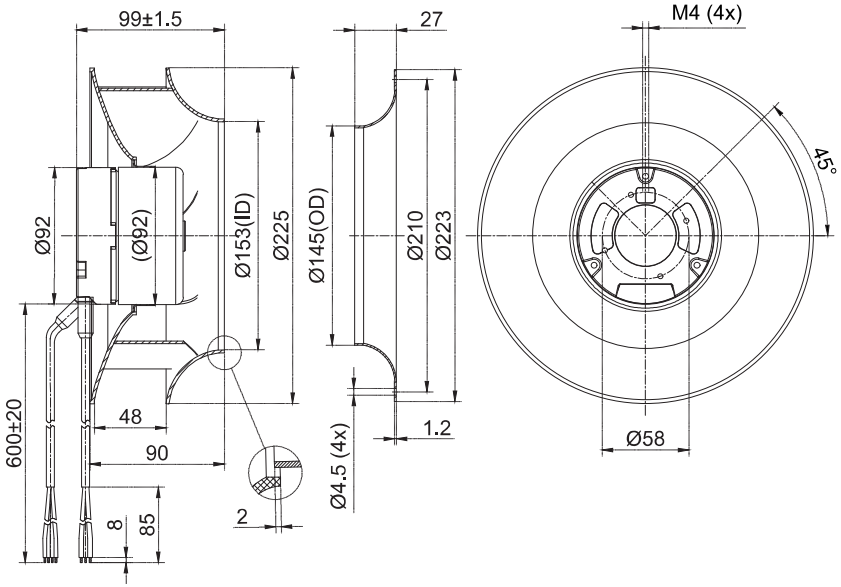

(支架离心风机Centrifugal Fan With Support Bracket)
FK3G225-2APY-96

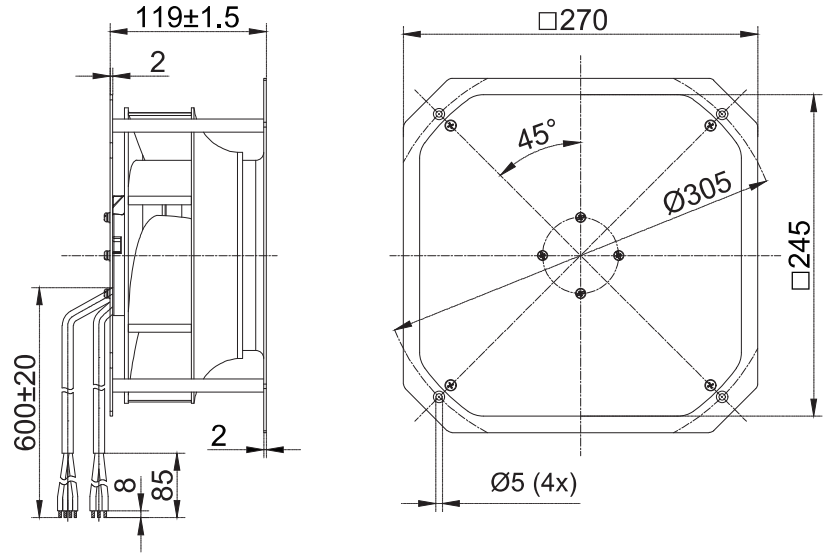



EC Backward Centrifugal Fans D250

– 材料**Material:** 塑料/铝合金/镀锌钢板
风轮**Impeller:** Plastic/Aluminium alloy/Galvanized steel plate
转子 Rotor: 电泳Electrophoresis
端盖 Electronics housing: 压铸铝Die-cast aluminium
– 叶片数量**Number of blades:** 7/8/11
– 防护等级**Degree of protection:** IP 44/45
– 绝缘等级**Insulation class:** B/F
– 安装位置**Installation position:**任意 Any
– 模式**Mode:**连续工作制 Continuous operation (S1)

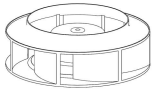	电机 **Motor**	曲线 **Curve**	额定电压 **Nominal voltage**	额定电压范围 **Nominal Voltage Range**	频率 **Frequency**	电流 **Current**	转速 **Speed**	输入功率 **Max. input Power**
Type			VAC	VAC	HZ	A	RPM	W
FB3G250-2AGL-90	BLEC92	Ⓐ	230	184~270	50/60	1.1	2750	150
FB3G250-2APS-90	BLEC92	Ⓑ	230	184~270	50/60	1.4	3050	220
FB3G250-2APS-96	BLEC92	Ⓑ	230	184~270	50/60	1.4	3050	220
FB3G250-2APS-20	BLEC102	Ⓒ	230	184~270	50/60	1.6	3550	360
FB3G250-2APS-21	BLEC102	Ⓓ	230	184~270	50/60	2.3	3750	500
FB3G250-2AAY-30	BLEC102	Ⓔ	230	184~270	50/60	3.3	3000	750

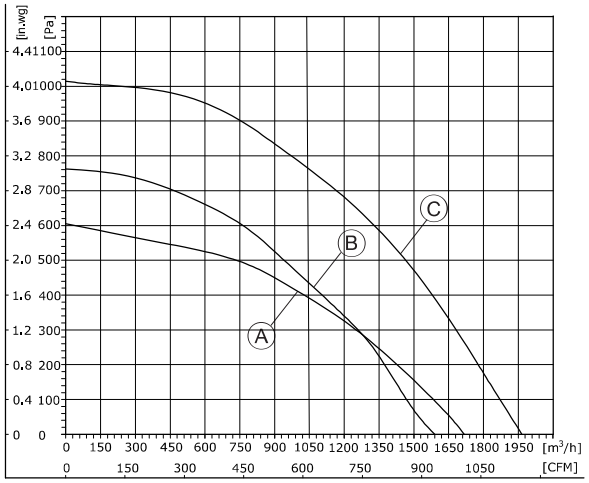

1、Air performance measured according to: ISO 5801, with DJ inlet ring without contact protection.
2、Intake-side sound level: LpA measured at 1 m distance from fan axis. The values given are only applicable under the specifi ed measuring conditions and may differ depending on the installation conditions.

EC Backward Centrifugal Fans D250

– 旋转方向**Direction of rotation:** 正转，从转子方向**C**lockwise，viewed toward rotor
– 技术特性**Technical features:** 参见附图See connection diagram
– 泄漏电流**Touch curren:** < 3,5 mA
– 能效**Efficiency:** ErP2015
– 标准/证书**Valid For Approval/Standard**：CE,RoHS,ISO9001
环境温度**Perm. ambient temp.**：**.**-25℃~+60℃
– 安装**Mounting:** 免维护滚珠轴承Maintenance-free ball bearings

噪音等级 **Sound Pressure Level**	风量 **Air Flow**	风压 **Air Pressure**	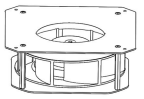	速度控制 **Speed Control**	接线图 **Wiring Mode**
dB(A)	m³/h	Pa	with support bracket		
74	1716	605	FK3G250-2AGL-90	0-10VDC PWM Modbus485	F2
77.1	1590	762	FK3G250-2APS-90		F2
77.1	1590	762	FK3G250-2APS-96		F2
82.6	1964	1016	FK3G250-2APS-20		F3,F5
86.2	2200	1520	FK3G250-2APS-21		F3,F5
87	3430	1077	FK3G250-2AAY-30		F7

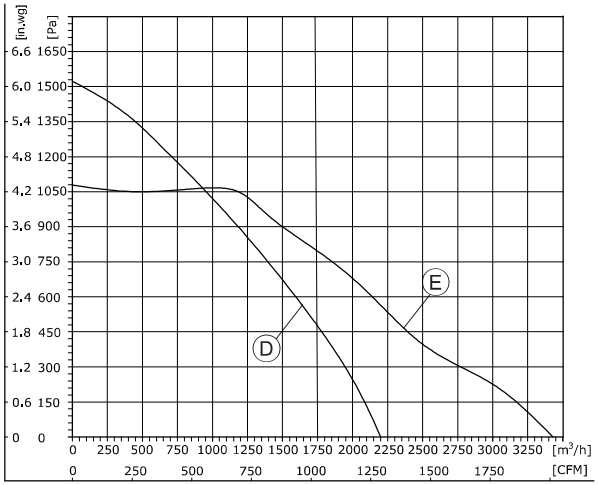

1、Air performance measured according to: ISO 5801, with DJ inlet ring without contact protection.
2、Intake-side sound level: LpA measured at 1 m distance from fan axis. The values given are only applicable under the specifi ed measuring conditions and may differ depending on the installation conditions.

(后向离心风机Centrifugal Fan)
FB3G250-2AGL-90

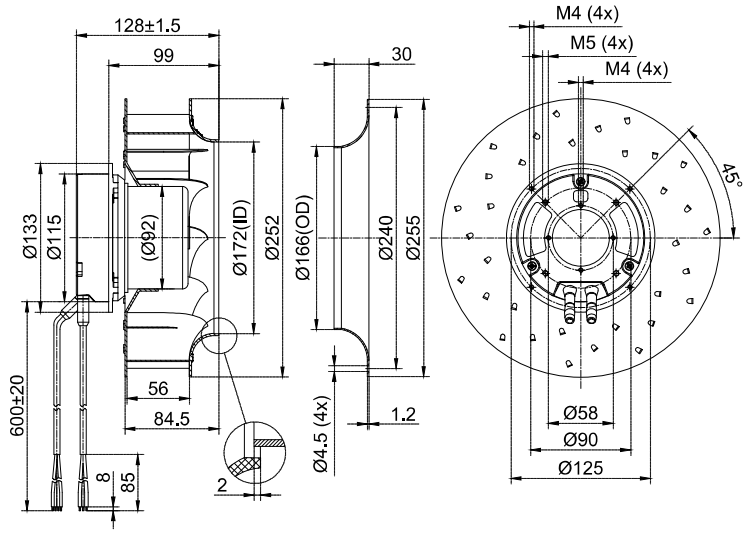

(后向离心风机Centrifugal Fan)
FB3G250-2APS-90

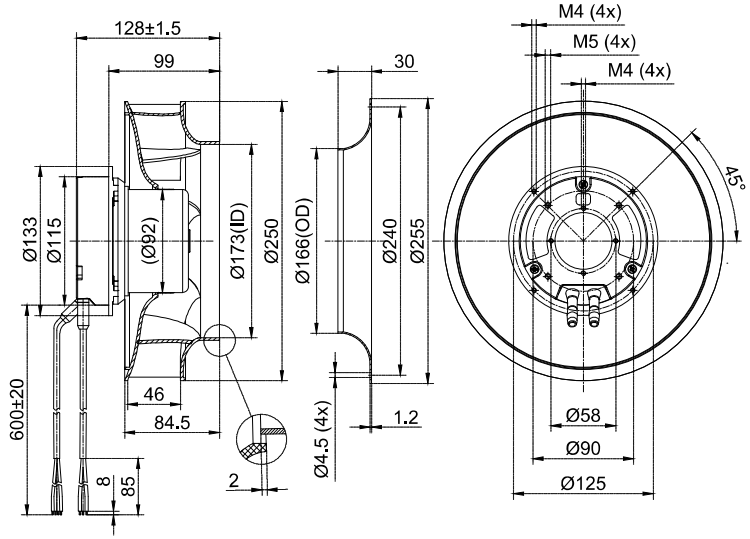

(支架离心风机Centrifugal Fan With Support Bracket)
FK3G250-2AGL-90

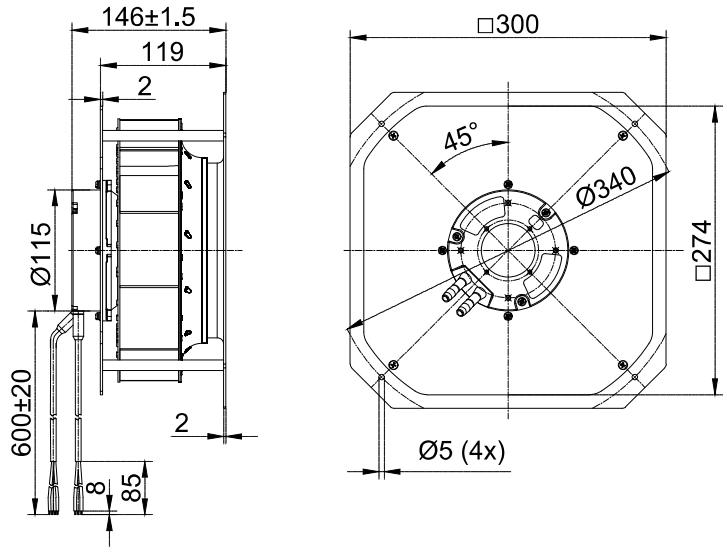

(支架离心风机Centrifugal Fan With Support Bracket)
FK3G250-2APS-90

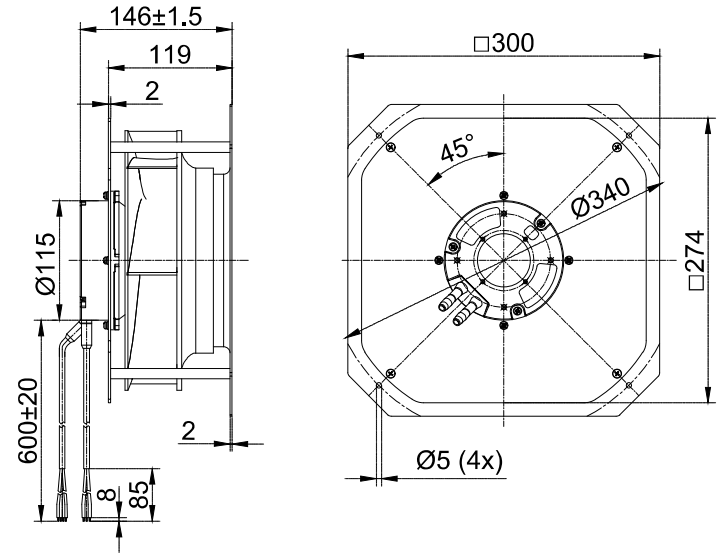

(后向离心风机Centrifugal Fan)
FB3G250-2APS-96

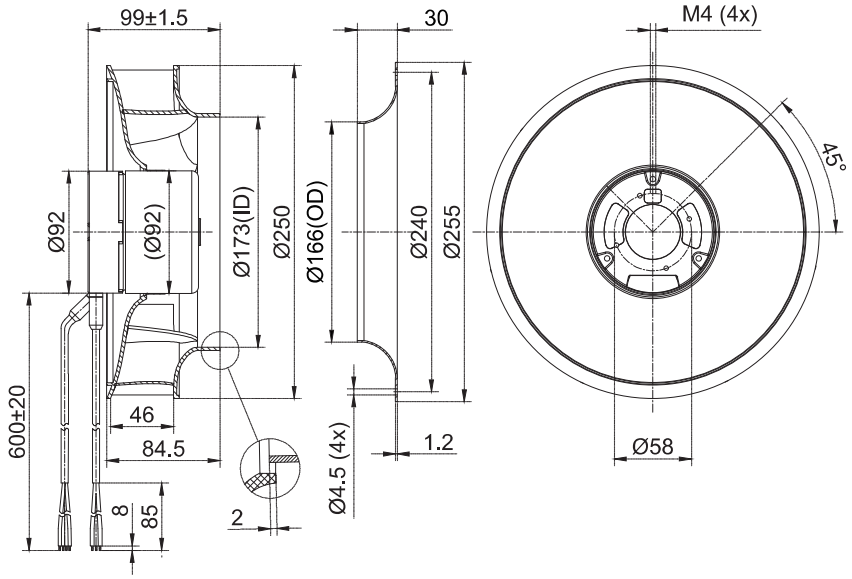

(后向离心风机Centrifugal Fan)
FB3G250-2APS-20

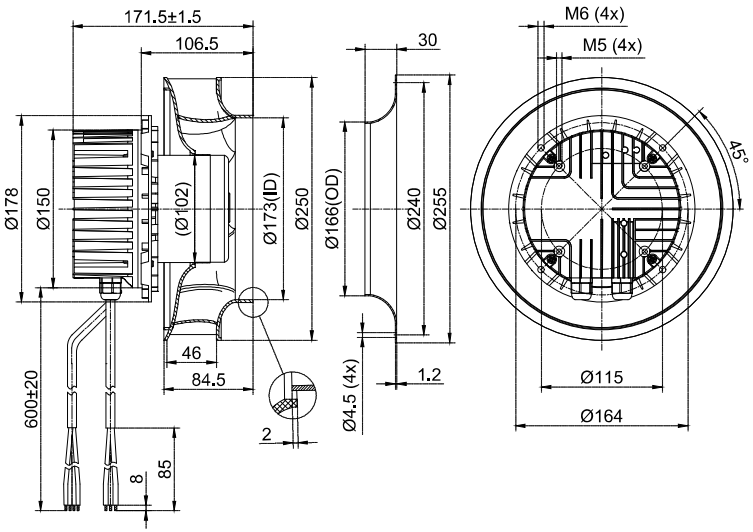

(支架离心风机Centrifugal Fan With Support Bracket)
FK3G250-2APS-96

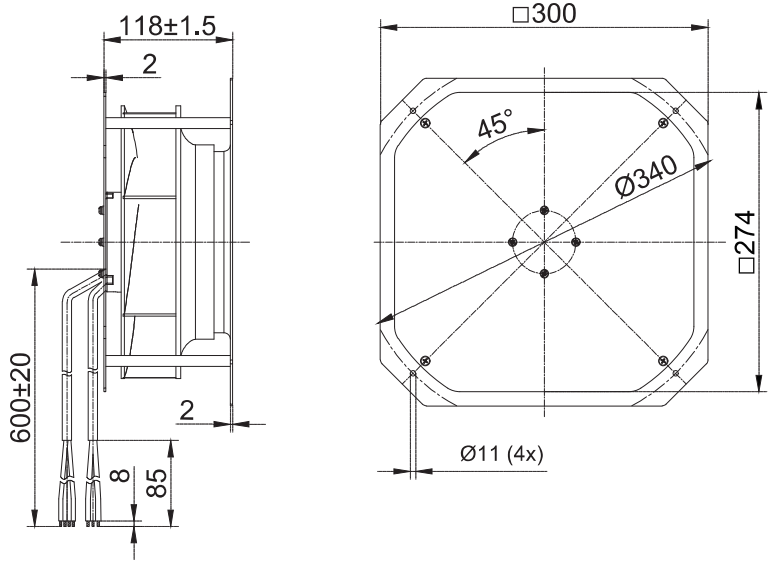

(支架离心风机Centrifugal Fan With Support Bracket)
FK3G250-2APS-20

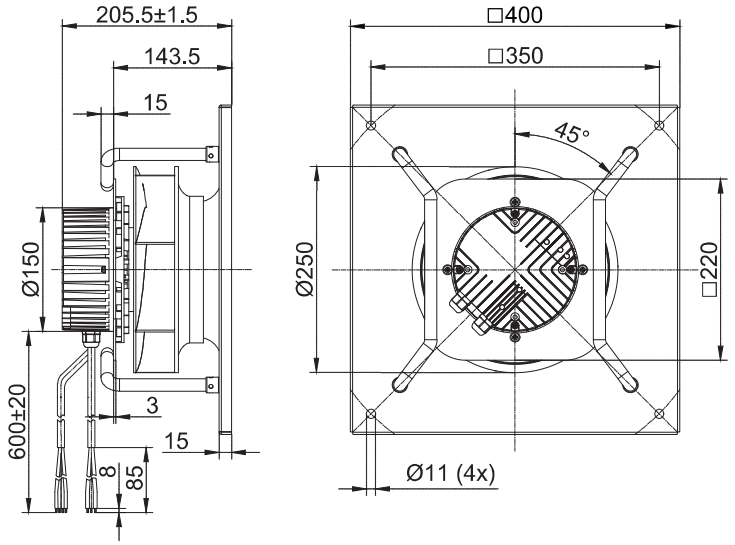

(后向离心风机Centrifugal Fan)
FB3G250-2APS-21

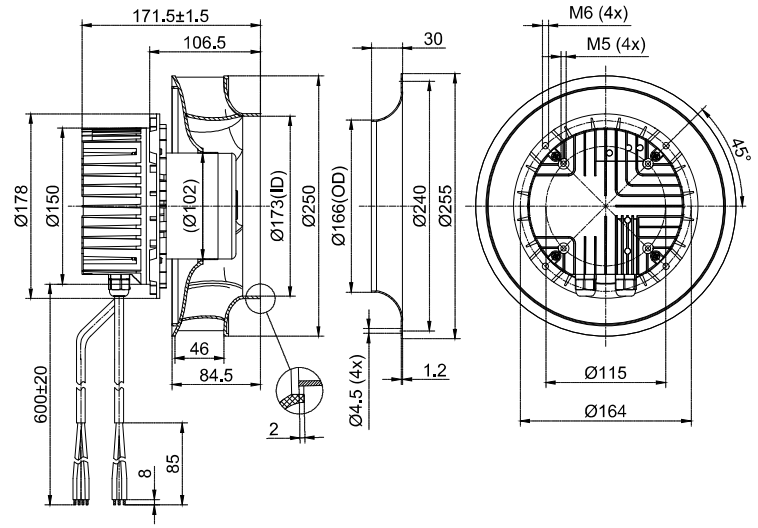

(后向离心风机Centrifugal Fan)
FB3G250-2AAY-30

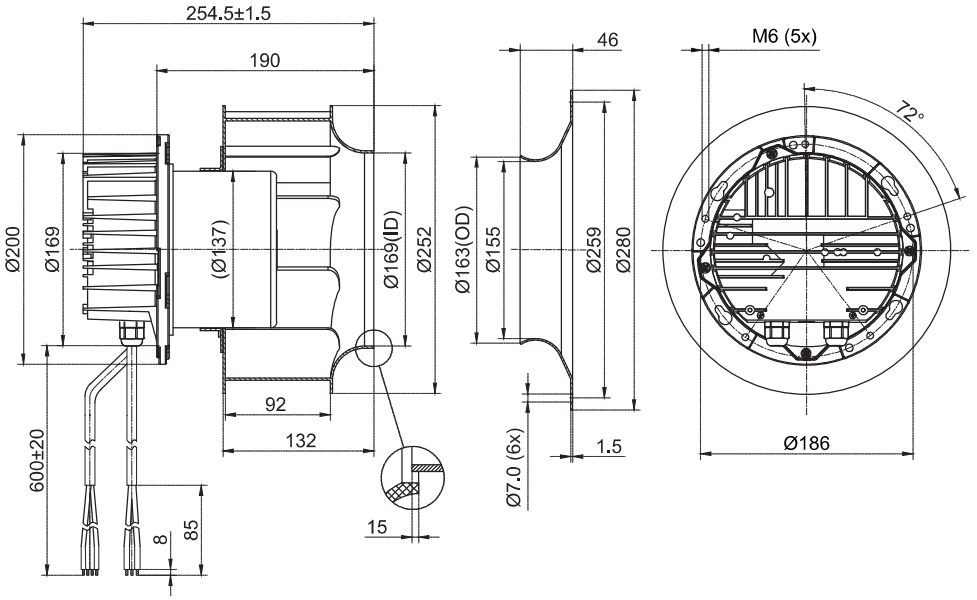

(支架离心风机Centrifugal Fan With Support Bracket)
FK3G250-2APS-21

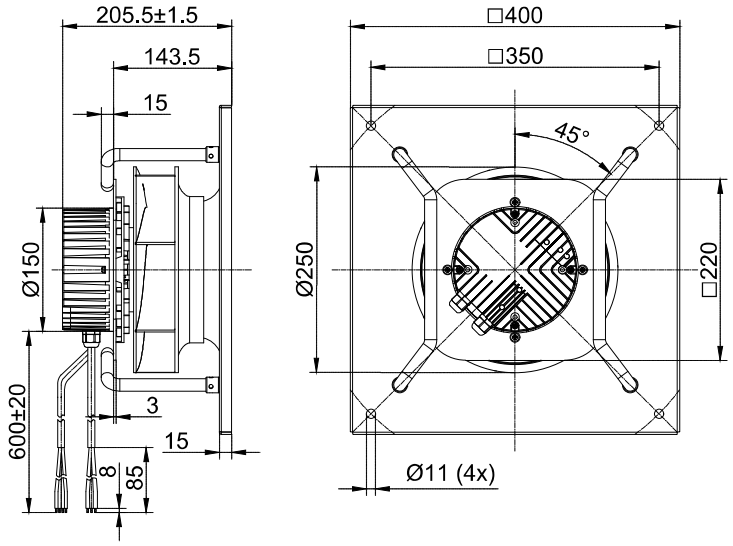

(支架离心风机Centrifugal Fan With Support Bracket)
FK3G250-2AAY-30

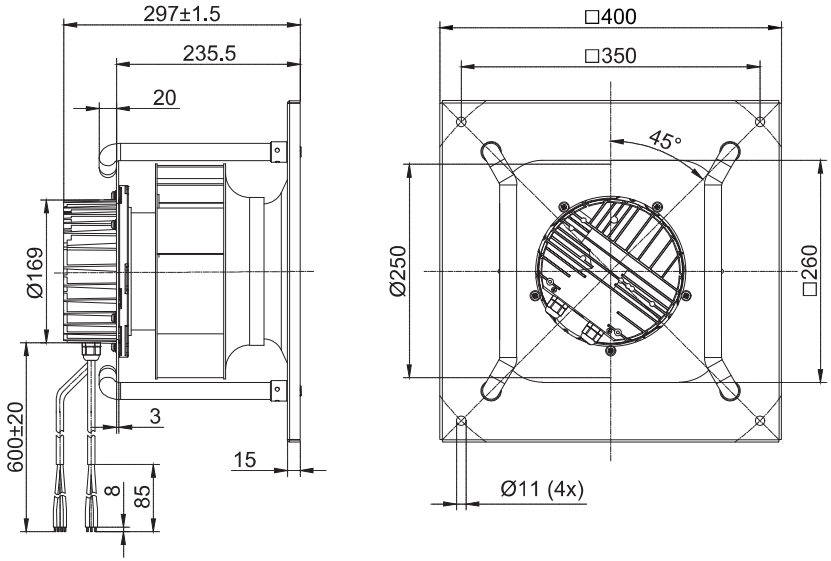

EC Backward Centrifugal Fans D280



- 材料**Material:** 塑料/铝合金/镀锌钢板
  风轮**Impeller:** Plastic/Aluminium alloy/Galvanized steel plate
  转子 Rotor: 电泳Electrophoresis
  端盖 Electronics housing: 压铸铝Die-cast aluminium
- 叶片数量**Number of blades:** 7/8/11
- 防护等级**Degree of protection:** IP 44/54
- 绝缘等级**Insulation class:** B/F
- 安装位置**Installation position:** 任意Any
- 模式**Mode:**连续工作制 Continuous operation (S1)

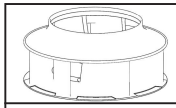	电机 **Motor**	曲线 **Curve**	额定电压 **Nominal voltage**	额定电压范围 **Nominal Voltage Range**	频率 **Frequency**	电流 **Current**	转速 **Speed**	输入功率 **Max. input Power**
Type			VAC	VAC	HZ	A	RPM	W
FB3G280-2APL-90	BLEC92	Ⓐ	230	184~270	50/60	1.45	1950	195
FB3G280-2AGY-20	BLEC102	Ⓑ	230	184~270	50/60	1.8	2780	410
FB3G280-2APL-20	BLEC102	Ⓒ	230	184~270	50/60	2.2	2750	500
FB3G280-2APL-21	BLEC102	Ⓓ	230	184~270	50/60	1.6	2500	370
FB3G280-2AAB-67	BLEC102	Ⓔ	230	184~270	50/60	3.1	3270	700
FB3G280-4AAL-30	BLEC137	Ⓕ	380	304~456	50/60	1.9	3500	1100

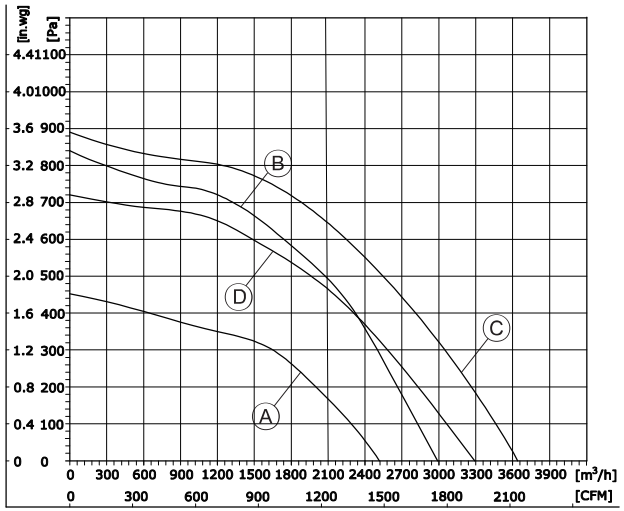

1、Air performance measured according to: ISO 5801, with DJ inlet ring without contact protection.
2、Intake-side sound level: LpA measured at 1 m distance from fan axis. The values given are only applicable under the specifi ed measuring conditions and may differ depending on the installation conditions.

EC Backward Centrifugal Fans D280

- 旋转方向**Direction of rotation:** 正转，从转子方向Clockwise，viewed toward rotor
- 技术特性**Technical features:** 参见附图See connection diagram
- 泄漏电流**Touch curren:** < 3,5 mA
- 能效**Efficiency:** ErP2015
- 标准/证书**Valid For Approval/Standard**：CE,RoHS,ISO9001
  环境温度**Perm. ambient temp.**：.-25℃~+60℃
- 安装**Mounting:** 免维护滚珠轴承Maintenance-free ball bearings

噪音等级 **Sound Pressure Level**	风量 **Air Flow**	风压 **Air Pressure**	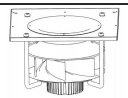	速度控制 **Speed Control**	接线图 **Wiring Mode**
dB(A)	m³/h	Pa	with support bracket		
71.5	2517	452	FK3G280-2APL-90	0-10VDC PWM Modbus485	F2
83.6	2943	840	FK3G280-2AGY-20		F3,F5
80.7	3642	891	FK3G280-2APL-20		F3,F5
78	3290	718	FK3G280-2APL-21		F3,F5
85	3780	1100	FK3G280-2AAB-67		F3,F5
88	3650	1280	FK3G280-4AAL-30		F8

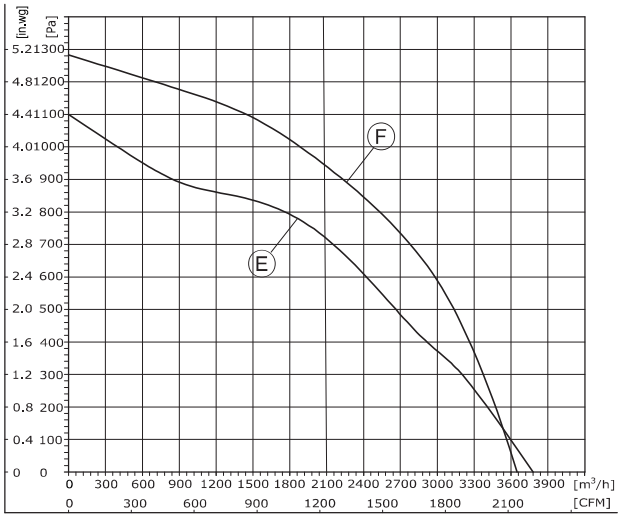

1、Air performance measured according to: ISO 5801, with DJ inlet ring without contact protection.
2、Intake-side sound level: LpA measured at 1 m distance from fan axis. The values given are only applicable under the specifi ed measuring conditions and may differ depending on the installation conditions.

(后向离心风机Centrifugal Fan)
FB3G280-2APL-90

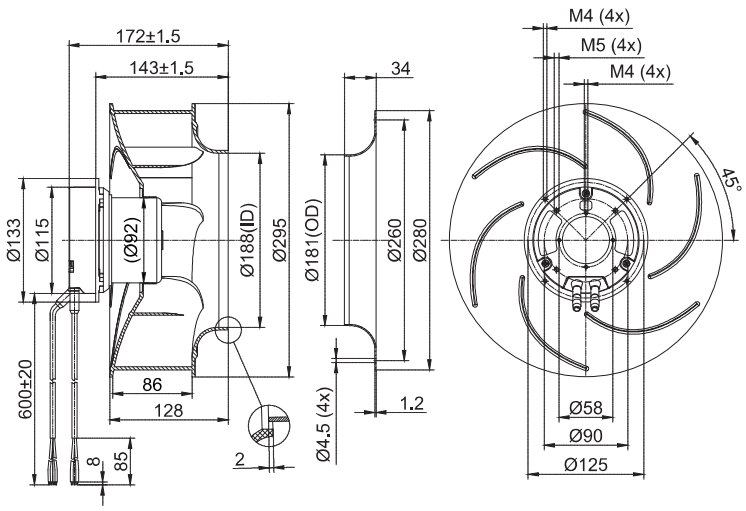

(后向离心风机Centrifugal Fan)
FB3G280-2AGY-20

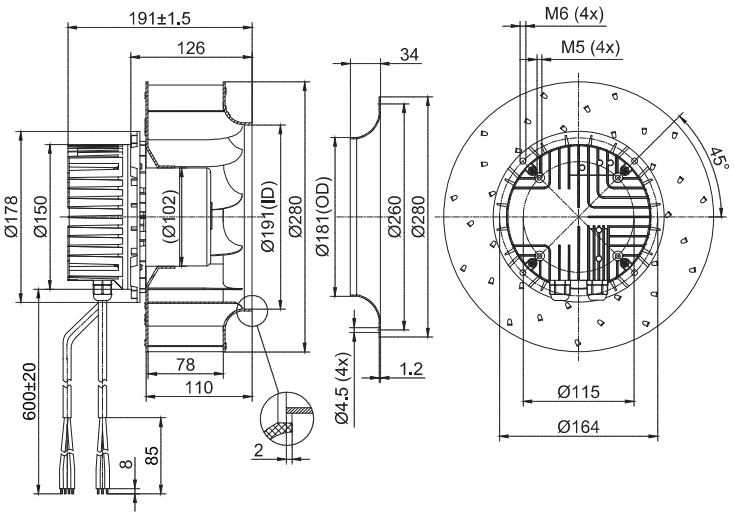

(支架离心风机Centrifugal Fan With Support Bracket)
FK3G280-2APL-90

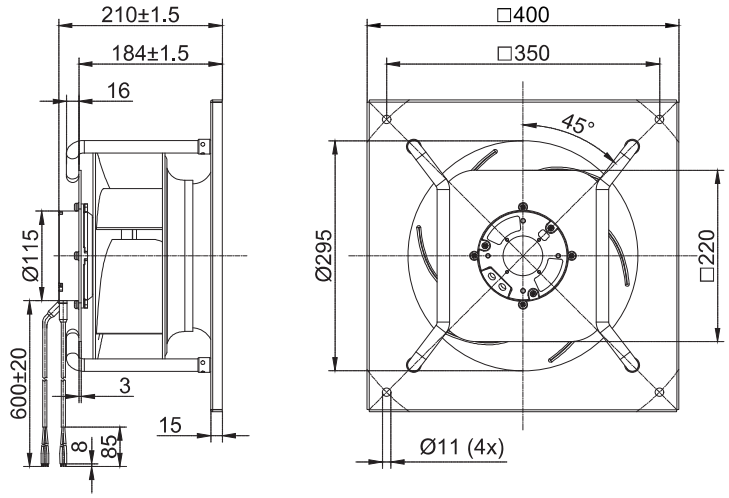

(支架离心风机Centrifugal Fan With Support Bracket)
FK3G280-2AGY-20

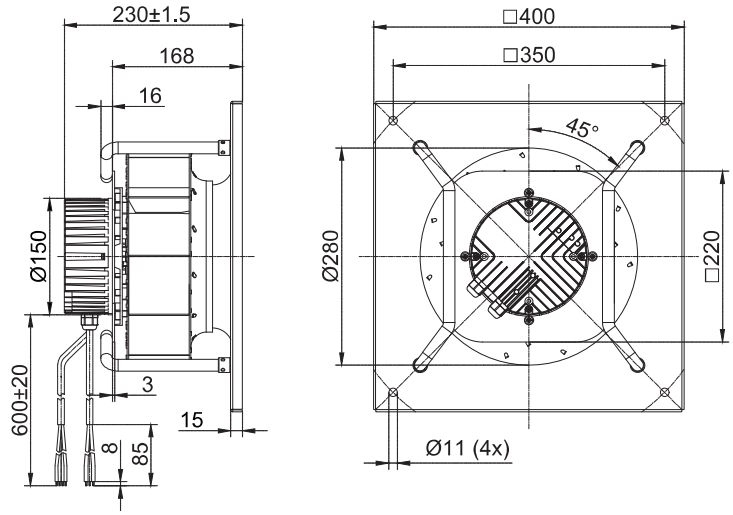

(后向离心风机Centrifugal Fan)
FB3G280-2APL-20

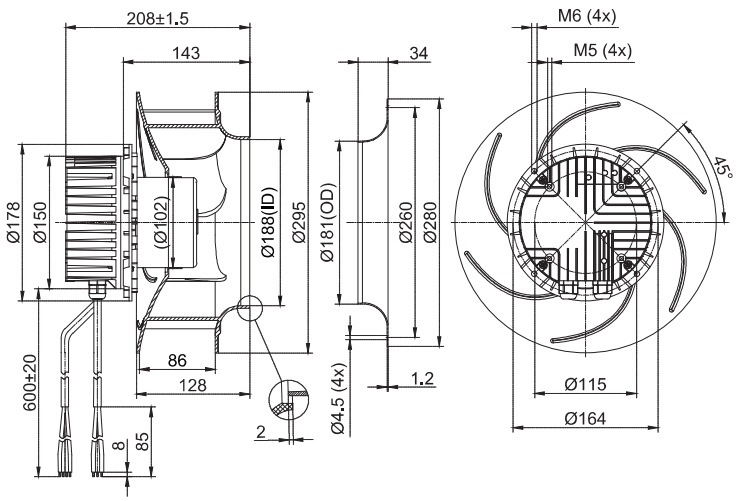

(后向离心风机Centrifugal Fan)
FB3G280-2APL-21

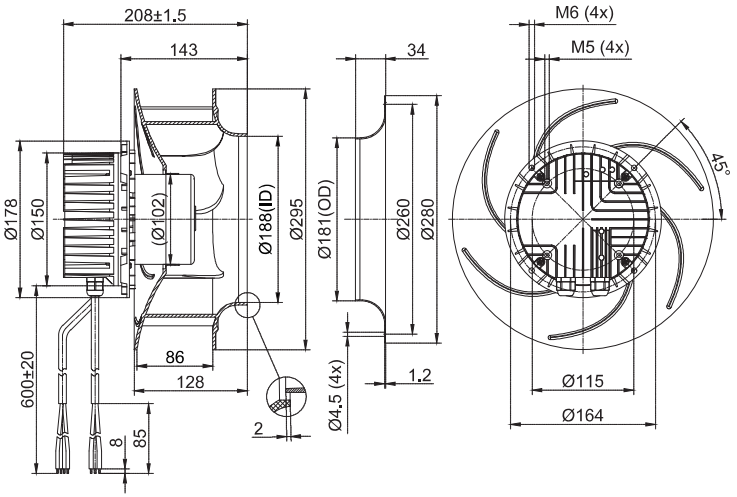

(支架离心风机Centrifugal Fan With Support Bracket)
FK3G280-2APL-20

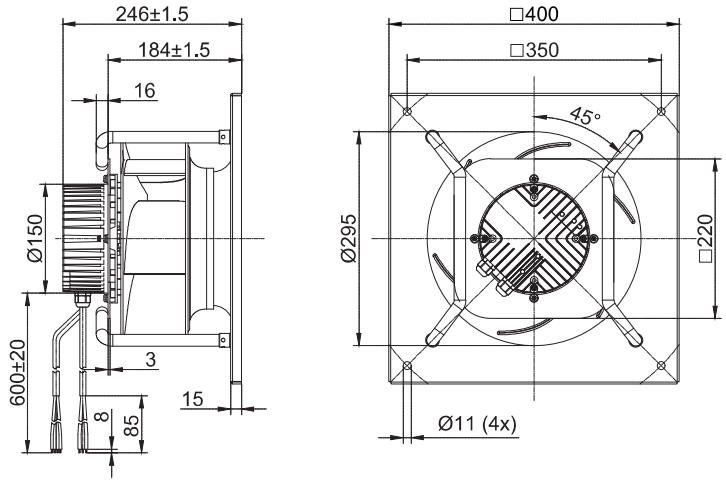

(支架离心风机Centrifugal Fan With Support Bracket)
FK3G280-2APL-21

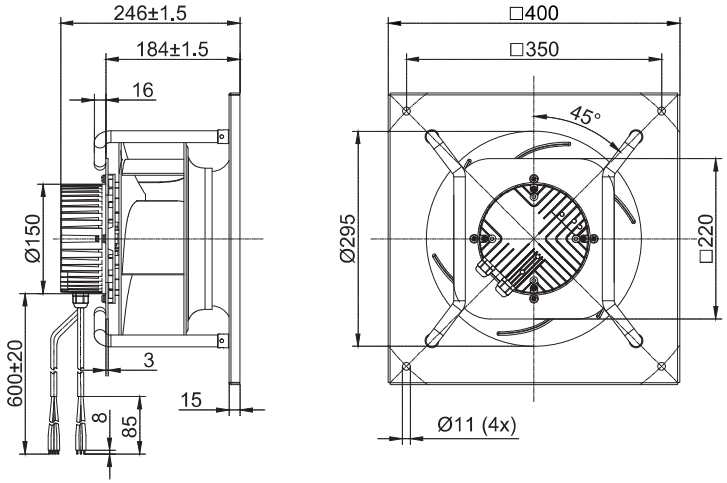

(后向离心风机Centrifugal Fan)
FB3G280-2AAB-67

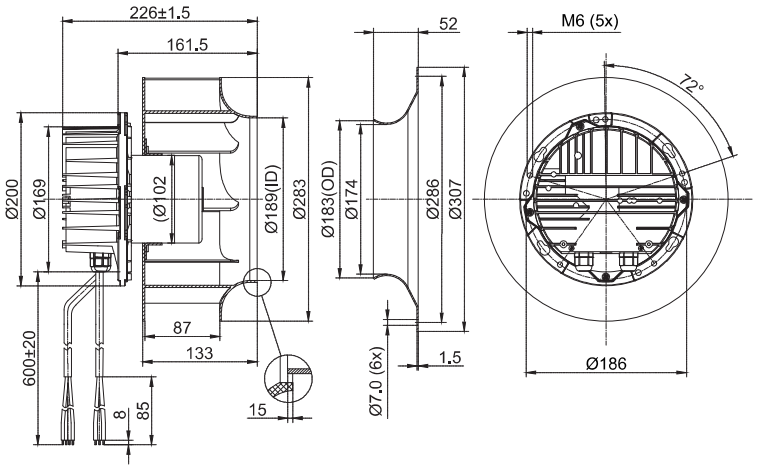

(后向离心风机Centrifugal Fan)
FB3G280-4AAL-30

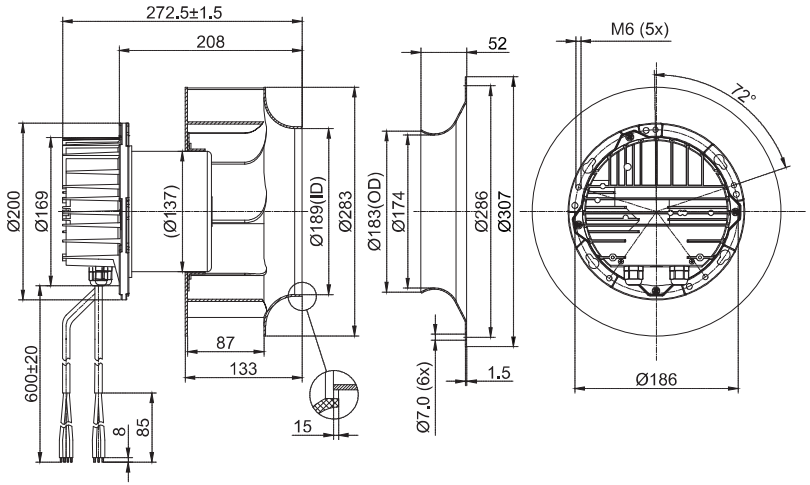

(支架离心风机Centrifugal Fan With Support Bracket)
FK3G280-2AAB-67

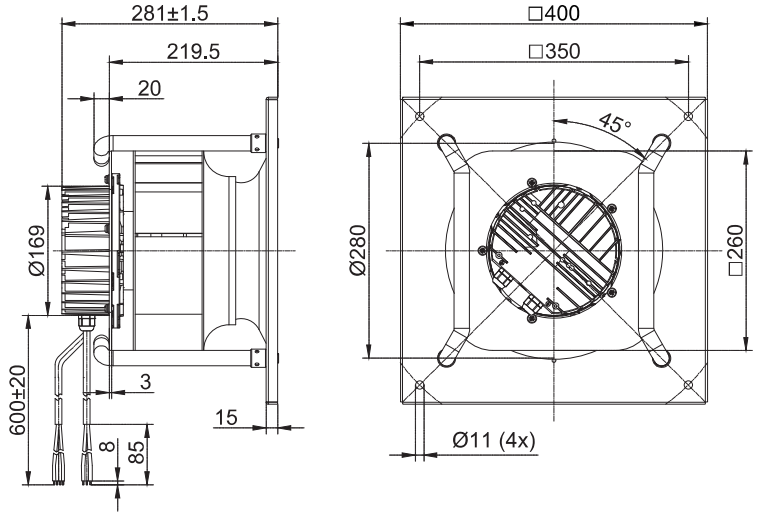

(支架离心风机Centrifugal Fan With Support Bracket)
FK3G280-4AAL-30

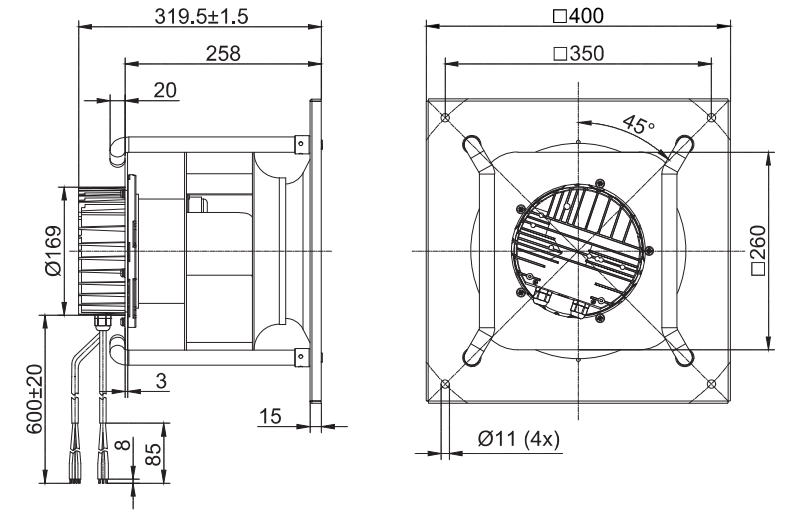



EC Backward Centrifugal Fans D310

– 材料**Material:** 塑料/铝合金
风轮**Impeller:** Plastic/Aluminium alloy
转子 Rotor: 电泳Electrophoresis
端盖 Electronics housing: 压铸铝Die-cast aluminium
– 叶片数量**Number of blades:** 6/7/8
– 防护等级**Degree of protection:** IP 44/54
– 绝缘等级**Insulation class:** B
– 安装位置**Installation position:** 任意Any
– 模式**Mode:**连续工作制 Continuous operation (S1)

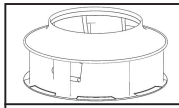	电机 Motor	曲线 Curve	额定电压 Nominal voltage	额定电压范围 Nominal Voltage Range	频率 Frequency	电流 Current	转速 Speed	输入功率 Max. input Power
Type			VAC	VAC	HZ	A	RPM	W
FB3G310-2AAL-90	BLEC92	A	230	184~270	50/60	1.2	2000	165
FB3G310-2AAY-90	BLEC92	B	230	184~270	50/60	1.3	1750	210
FB3G310-2AAL-20	BLEC102	C	230	184~270	50/60	1.75	2650	396
FB3G310-2AAY-20	BLEC102	D	230	184~270	50/60	1.5	2300	350
FB3G310-2AAB-67	BLEC102	E	230	184~270	50/60	3.1	2960	700
FB3G310-2APK-20	BLEC102	F	230	184~270	50/60	2.2	2360	500
FB3G310-2APK-60	BLEC102	G	230	184~270	50/60	3.25	2640	740
FB3G310-4APK-60	BLEC102	H	380	304~456	50/60	1.25	2700	790

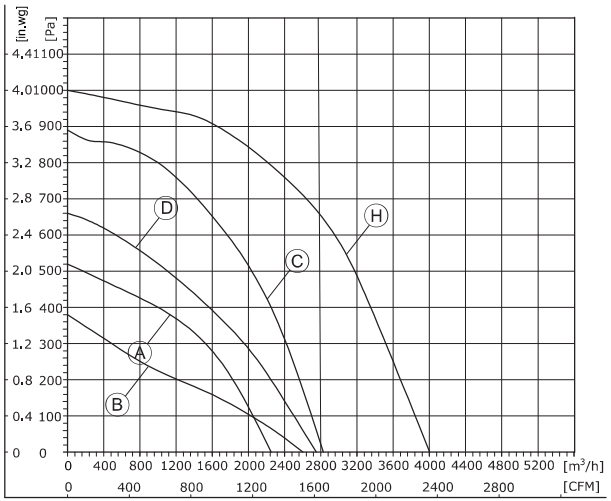

1、Air performance measured according to: ISO 5801, with DJ inlet ring without contact protection.
2、Intake-side sound level: LpA measured at 1 m distance from fan axis. The values given are only applicable under the specifi ed measuring conditions and may differ depending on the installation conditions.

EC Centrifugal Fans

EC Centrifugal Fan

EC Backward Centrifugal Fans D310

– 旋转方向**Direction of rotation:** 正转，从转子方向Clockwise，viewed toward rotor
– 技术特性**Technical features:** 参见附图See connection diagram
– 泄漏电流**Touch curren:** < 3,5 mA
– 能效**Efficiency:** ErP2015
– 标准/证书**Valid For Approval/Standard**：CE,RoHS,ISO9001
环境温度**Perm. ambient temp.**：.-25℃~+60℃
– 安装**Mounting:** 免维护滚珠轴承Maintenance-free ball bearings

噪音等级 Sound Pressure Level	风量 Air Flow	风压 Air Pressure	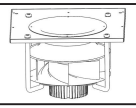	速度控制 Speed Control	接线图 Wiring Mode
dB(A)	m³/h	Pa	with support bracket		
67.7	2250	520	FK3G310-2AAL-90	0-10VDC PWM Modbus485	F2
64	2600	380	FK3G310-2AAY-90		F2
80.4	2826	888	FK3G310-2AAL-20		F3,F5
73	2750	660	FK3G310-2AAY-20		F3,F5
85	4000	1060	FK3G310-2AAB-67		F3,F5
81	3721	950	FK3G310-2APK-20		F3,F5
84	4000	1000	FK3G310-2APK-60		F3,F5
84	4000	1000	FK3G310-4APK-60		F8

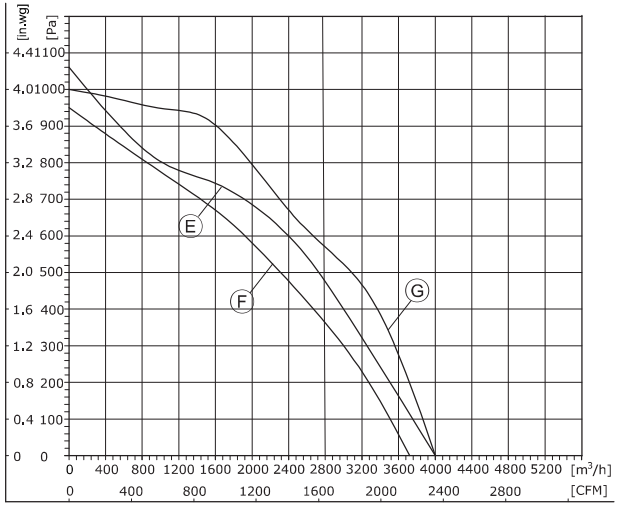

1、Air performance measured according to: ISO 5801, with DJ inlet ring without contact protection.
2、Intake-side sound level: LpA measured at 1 m distance from fan axis. The values given are only applicable under the specifi ed measuring conditions and may differ depending on the installation conditions.

(后向离心风机Centrifugal Fan)
FB3G310-2AAL-90

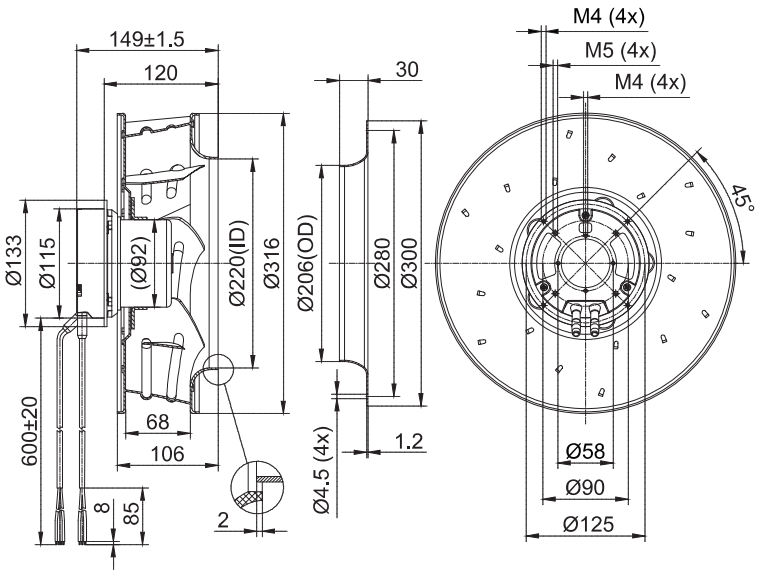

(后向离心风机Centrifugal Fan)
FB3G310-2AAY-90

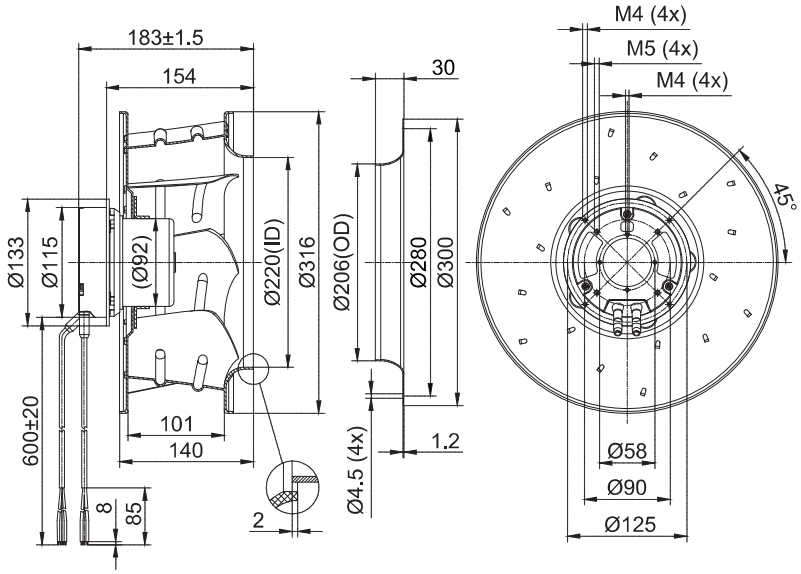

(支架离心风机Centrifugal Fan With Support Bracket)
FK3G310-2AAL-90

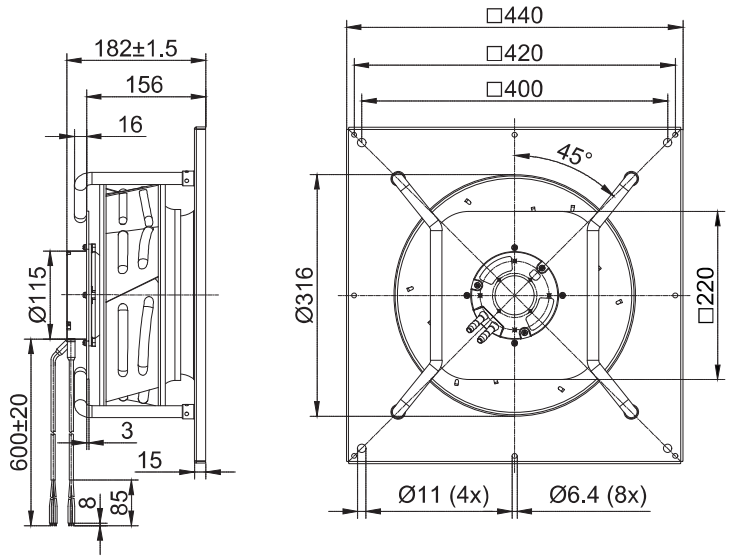

(支架离心风机Centrifugal Fan With Support Bracket)
FK3G310-2AAY-90

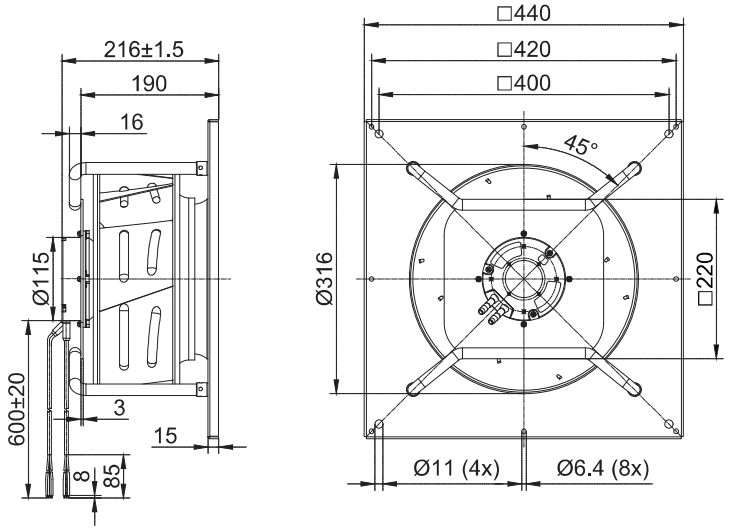

(后向离心风机Centrifugal Fan)
FB3G310-2AAL-20

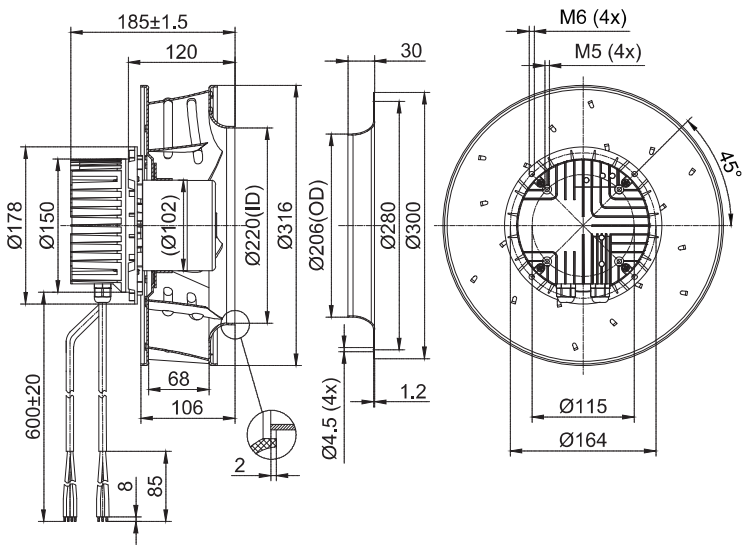

(后向离心风机Centrifugal Fan)
FB3G310-2AAY-20

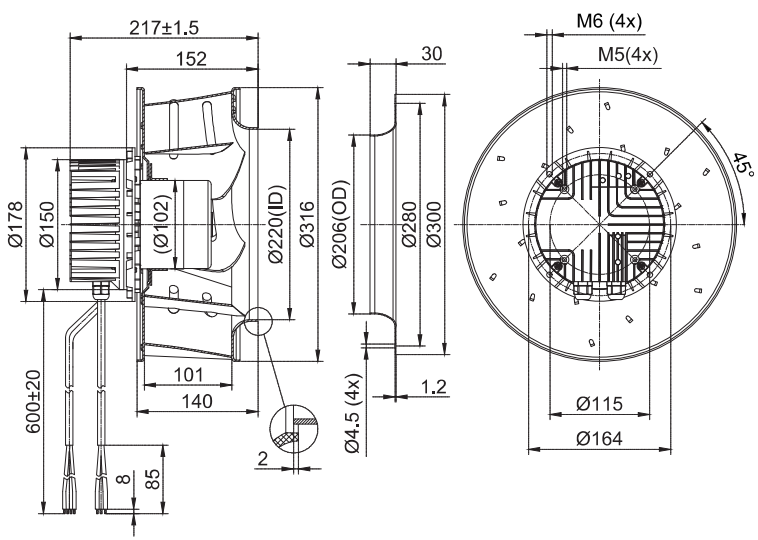

(支架离心风机Centrifugal Fan With Support Bracket)
FK3G310-2AAL-20

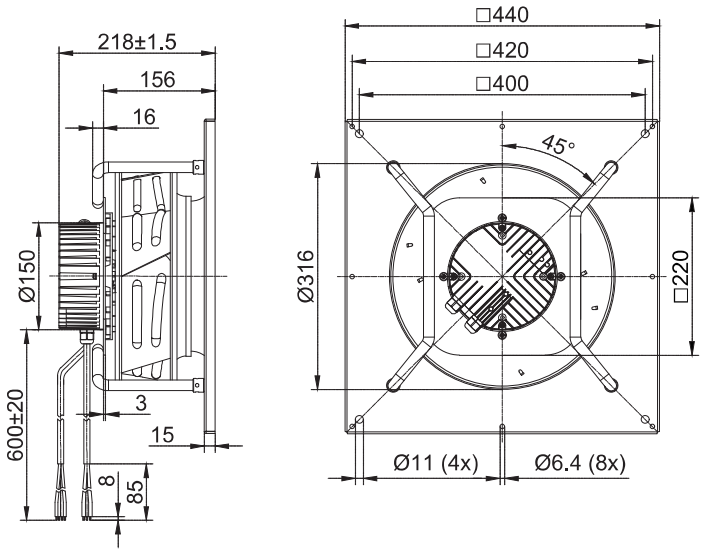

(支架离心风机Centrifugal Fan With Support Bracket)
FK3G310-2AAY-20

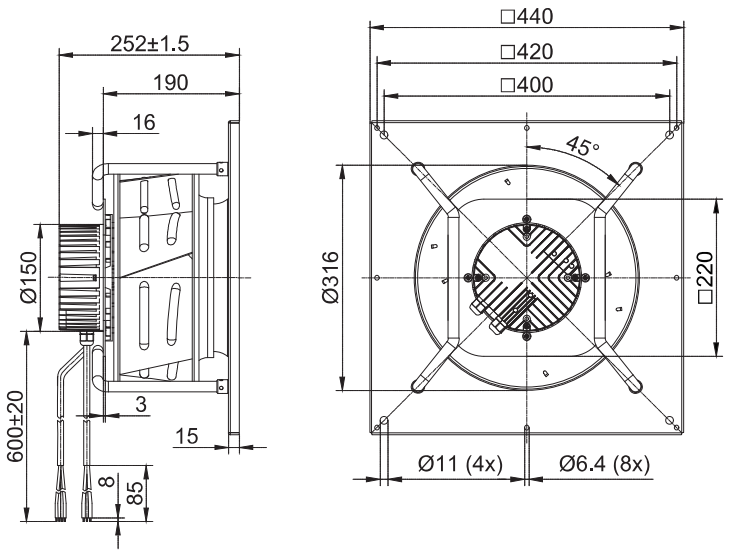

(后向离心风机Centrifugal Fan)
FB3G310-2AAB-67

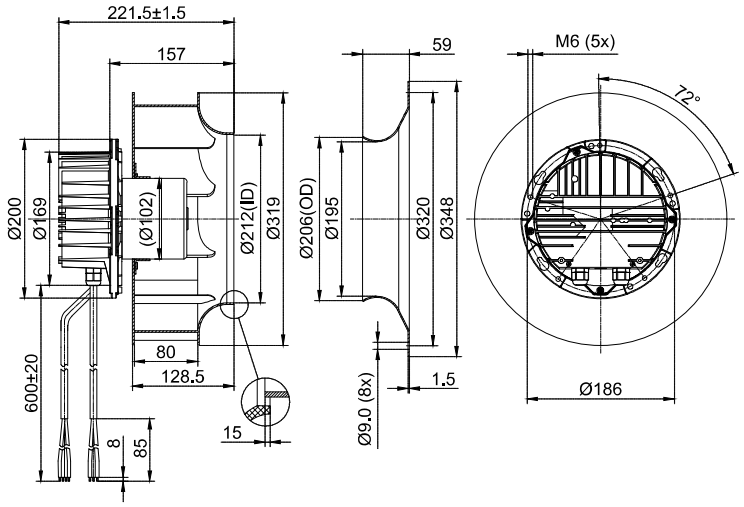

(后向离心风机Centrifugal Fan)
FB3G310-2APK-20

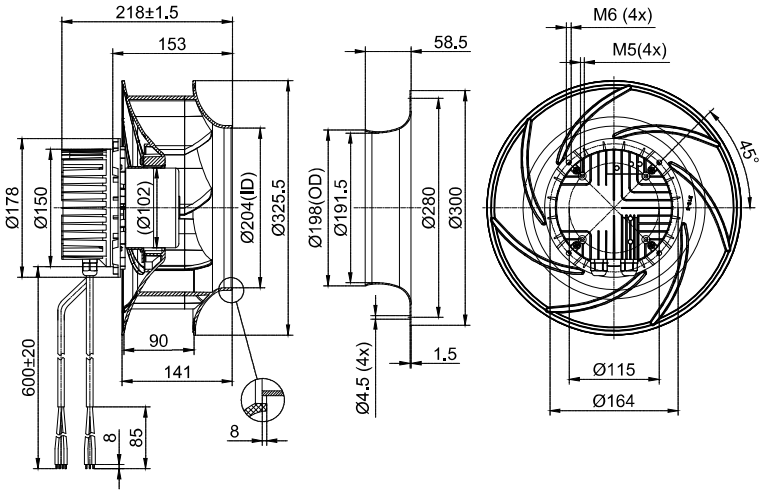

(支架离心风机Centrifugal Fan With Support Bracket)
FK3G310-2AAB-67

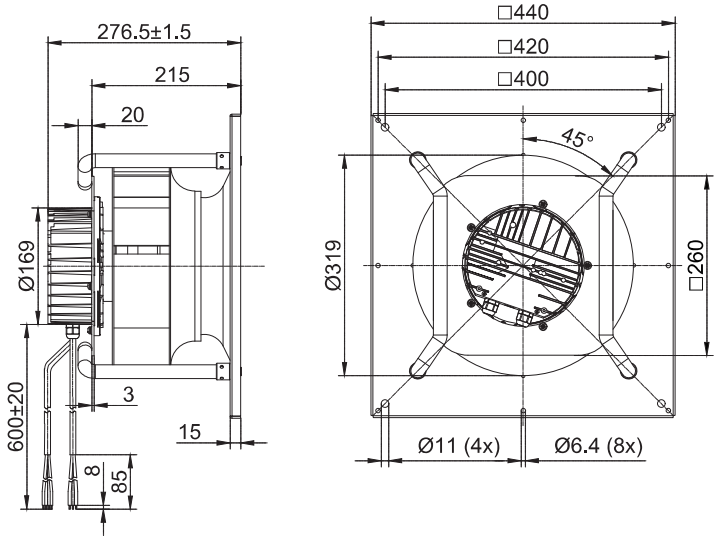

(支架离心风机Centrifugal Fan With Support Bracket)
FK3G310-2APK-20

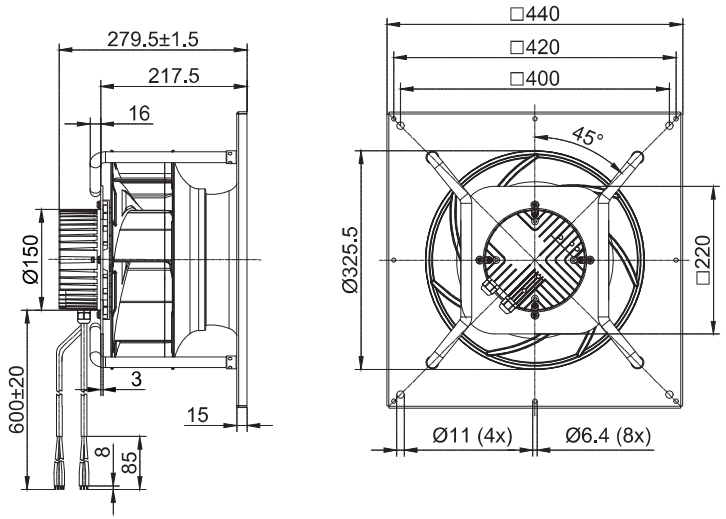

(后向离心风机Centrifugal Fan)
FB3G310-2APK-60

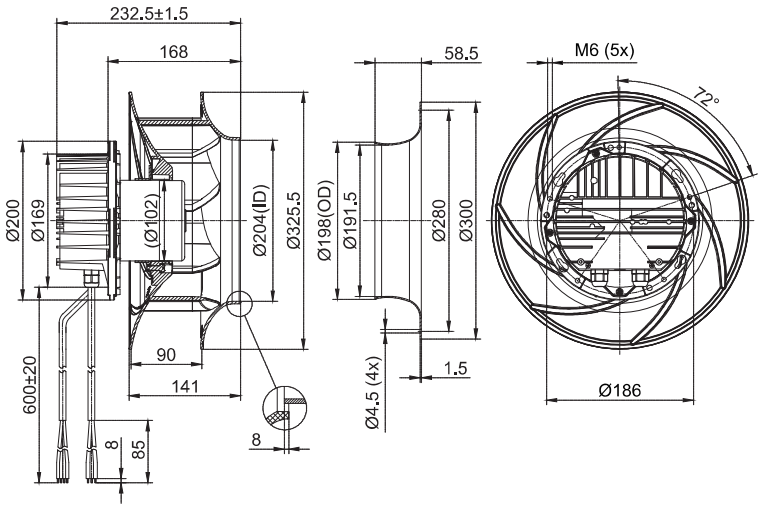

(后向离心风机Centrifugal Fan)
FB3G310-4APK-60

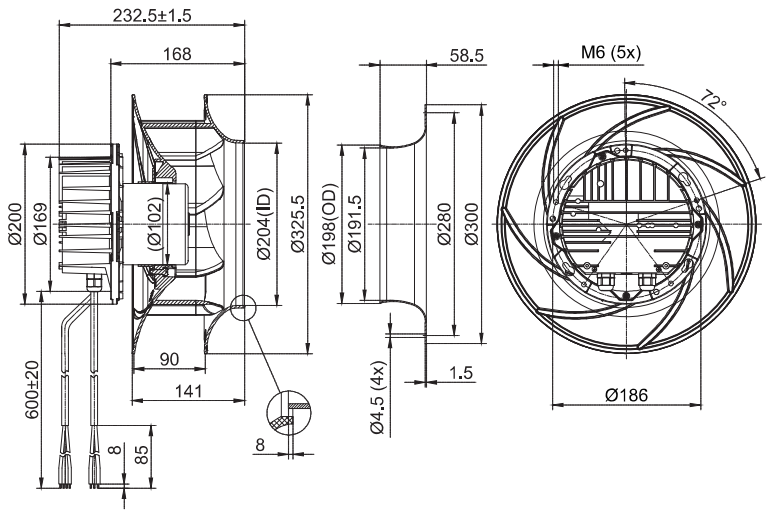

(支架离心风机Centrifugal Fan With Support Bracket)
FK3G310-2APK-60

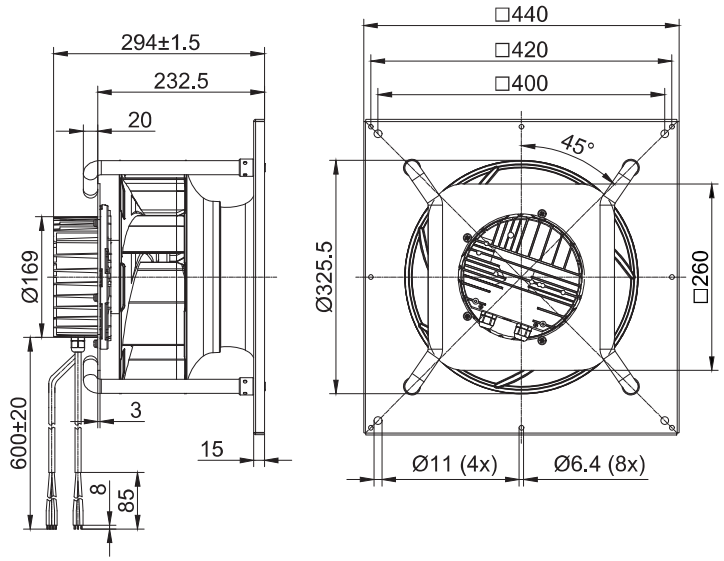

(支架离心风机Centrifugal Fan With Support Bracket)
FK3G310-4APK-60

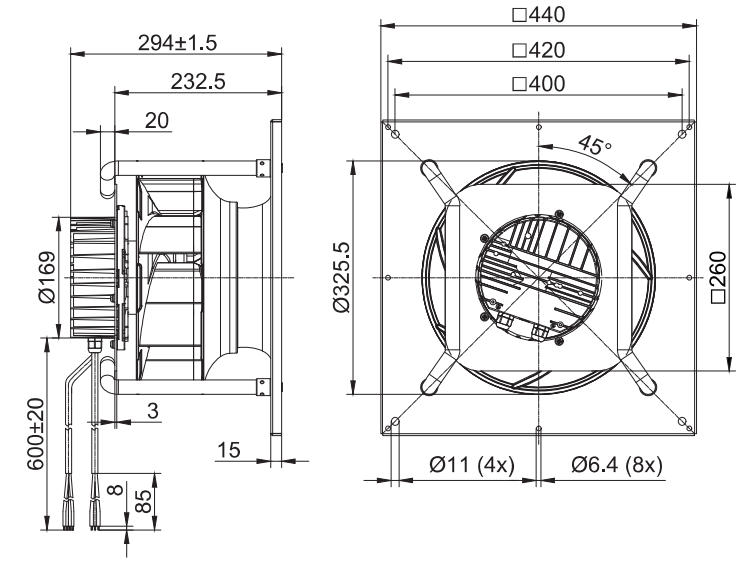



EC Backward Centrifugal Fans D355

– 材料**Material:** 塑料/铝合金
风轮**Impeller:** Plastic/Aluminium alloy
转子 Rotor: 电泳Electrophoresis
端盖 Electronics housing: 压铸铝Die-cast aluminium
– 叶片数量**Number of blades:** 6/7/8
– 防护等级**Degree of protection:** IP 54
– 绝缘等级**Insulation class:** B/F
– 安装位置**Installation position:** 任意Any
– 模式**Mode:**连续工作制 Continuous operation (S1)

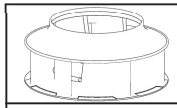	电机 **Motor**	曲线 **Curve**	额定电压 **Nominal voltage**	额定电压范围 **Nominal Voltage Range**	频率 **Frequency**	电流 **Current**	转速 **Speed**	输入功率 **Max. input Power**
Type			VAC	VAC	HZ	A	RPM	W
FB3G355-2AAL-20	BLEC102	Ⓐ	230	184~270	50/60	1.75	2050	405
FB3G355-2AAY-20	BLEC102	Ⓑ	230	184~270	50/60	2.0	1920	480
FB3G355-2AAB-67	BLEC102	Ⓒ	230	184~270	50/60	3.1	2200	700
FB3G355-2APK-20	BLEC102	Ⓓ	230	184~270	50/60	2.2	1850	500
FB3G355-2APK-60	BLEC102	Ⓔ	230	184~270	50/60	3.3	2100	750
FB3G355-4APK-30	BLEC137	Ⓕ	380	304~456	50/60	1.8	2400	1140

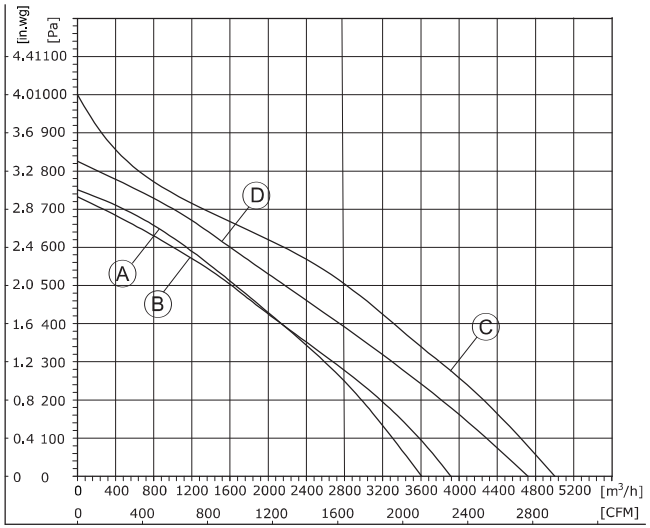

1、Air performance measured according to: ISO 5801, with DJ inlet ring without contact protection.
2、Intake-side sound level: LpA measured at 1 m distance from fan axis. The values given are only applicable under the specifi ed measuring conditions and may differ depending on the installation conditions.

EC Centrifugal Fans

EC Backward Centrifugal Fans D355

– 旋转方向**Direction of rotation:** 正转，从转子方向Clockwise，viewed toward rotor
– 技术特性**Technical features:** 参见附图See connection diagram
– 泄漏电流**Touch curren:** < 3,5 mA
– 能效**Efficiency:** ErP2015
– 标准/证书**Valid For Approval/Standard**：CE,RoHS,ISO9001
环境温度**Perm. ambient temp.**：.-25℃~+60℃
– 安装**Mounting:** 免维护滚珠轴承Maintenance-free ball bearings

噪音等级 **Sound Pressure Level**	风量 **Air Flow**	风压 **Air Pressure**	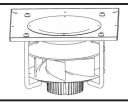	速度控制 **Speed Control**	接线图 **Wiring Mode**
dB(A)	m³/h	Pa FK	with support bracket		
76	3613	750	FK3G355-2AAL-20	0-10VDC PWM Modbus485	F3,F5
74	3910	735	FK3G355-2AAY-20		F3,F5
81	4990	1000	FK3G355-2AAB-67		F3,F5
84	4720	825	FK3G355-2APK-20		F3,F5
87	5000	1000	FK3G355-2APK-60		F7
91	5600	1050	FB3G355-4APK-30		F7

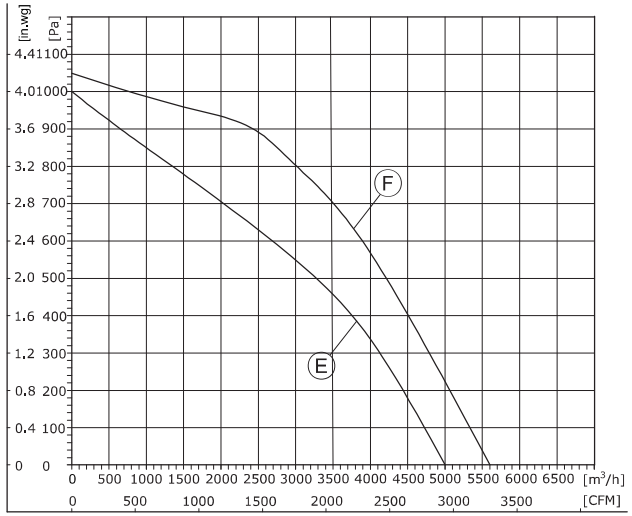

1、Air performance measured according to: ISO 5801, with DJ inlet ring without contact protection.
2、Intake-side sound level: LpA measured at 1 m distance from fan axis. The values given are only applicable under the specifi ed measuring conditions and may differ depending on the installation conditions.

(后向离心风机Centrifugal Fan)
FB3G355-2AAL-20

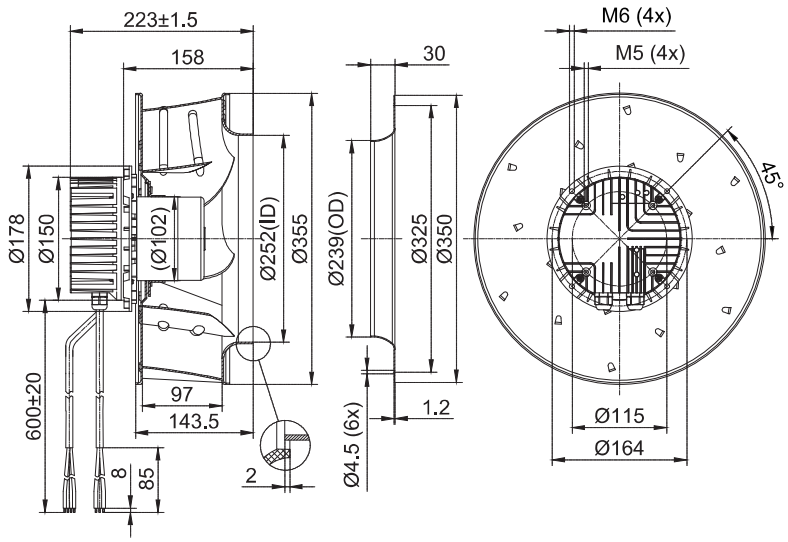

(后向离心风机Centrifugal Fan)
FB3G355-2AAY-20

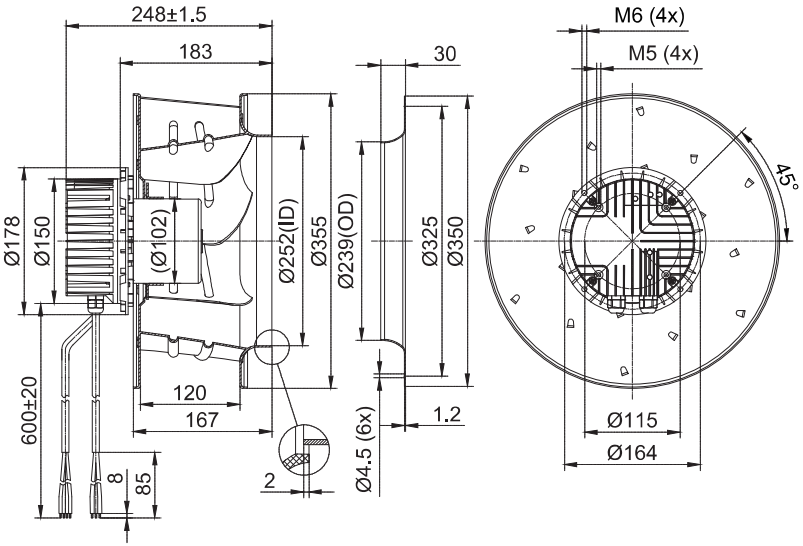

(支架离心风机Centrifugal Fan With Support Bracket)
FK3G355-2AAL-20

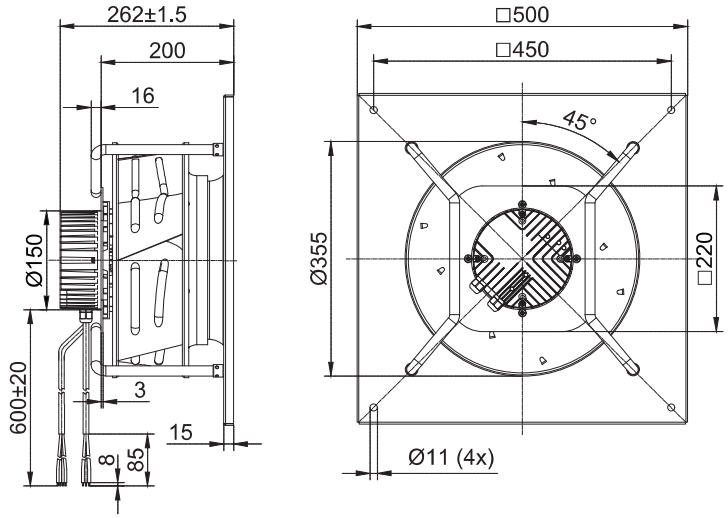

(支架离心风机Centrifugal Fan With Support Bracket)
FK3G355-2AAY-20

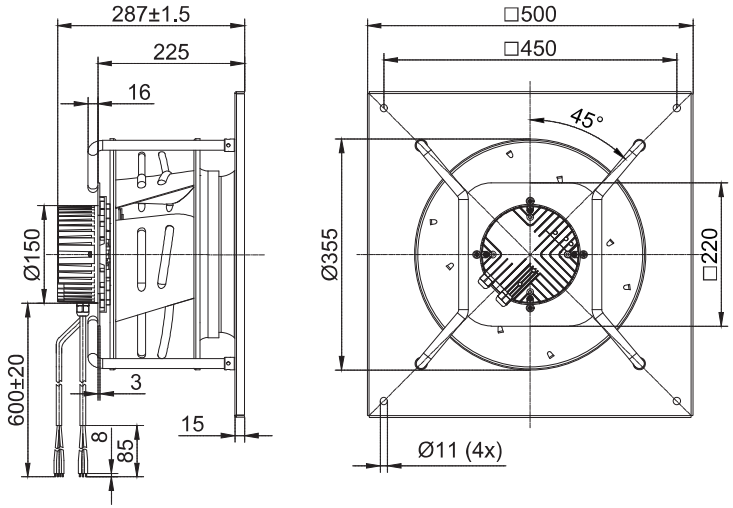

(后向离心风机Centrifugal Fan)
FB3G355-2AAB-67

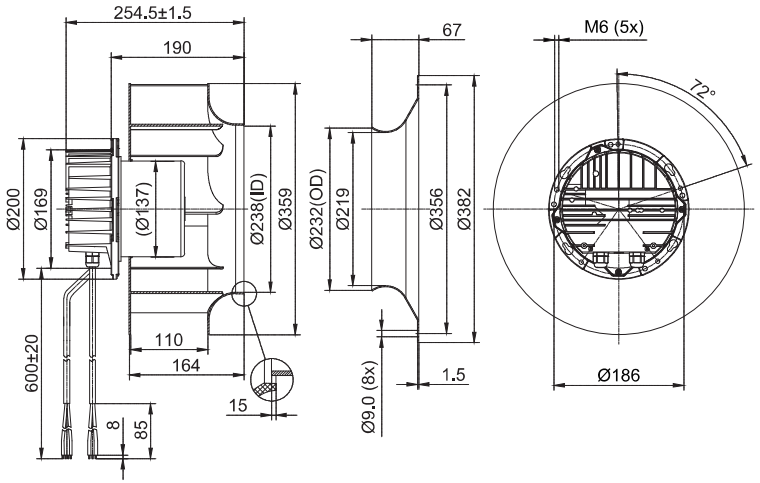

(后向离心风机Centrifugal Fan)
FB3G355-2APK-20

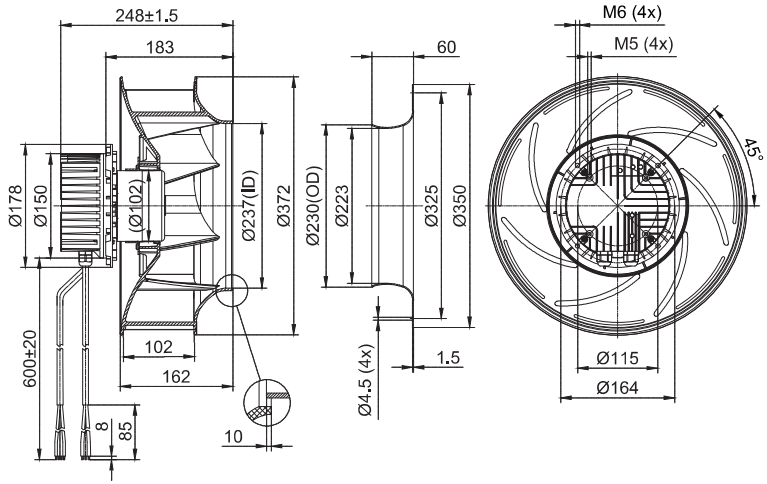

(支架离心风机Centrifugal Fan With Support Bracket)
FK3G355-2AAB-67

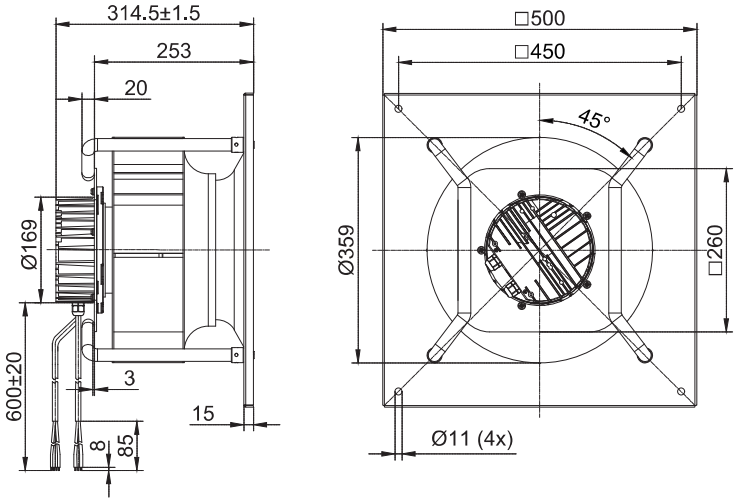

(支架离心风机Centrifugal Fan With Support Bracket)
FK3G355-2APK-20

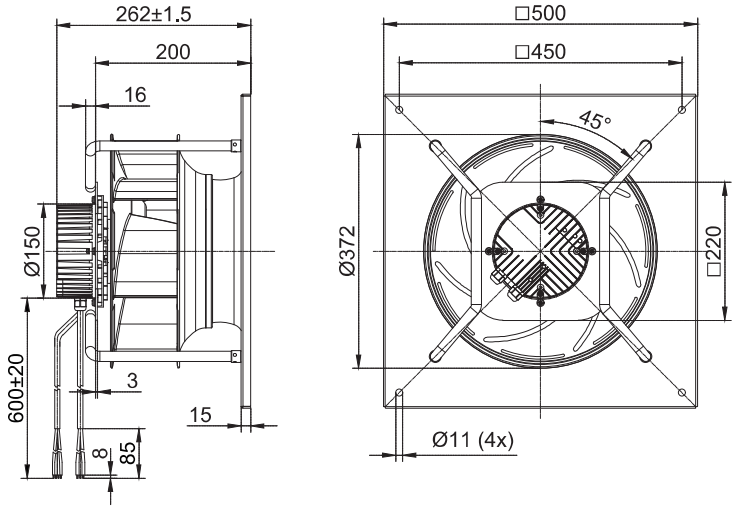

(后向离心风机Centrifugal Fan)
FB3G355-2APK-60

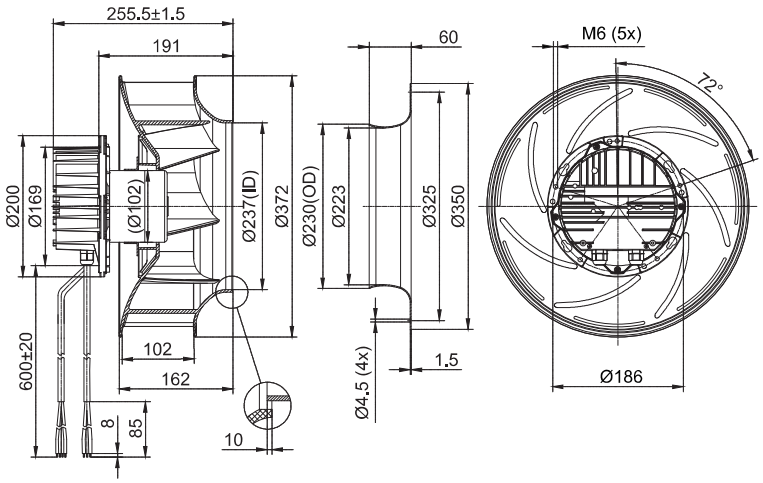

(后向离心风机Centrifugal Fan)
FB3G355-4APK-30

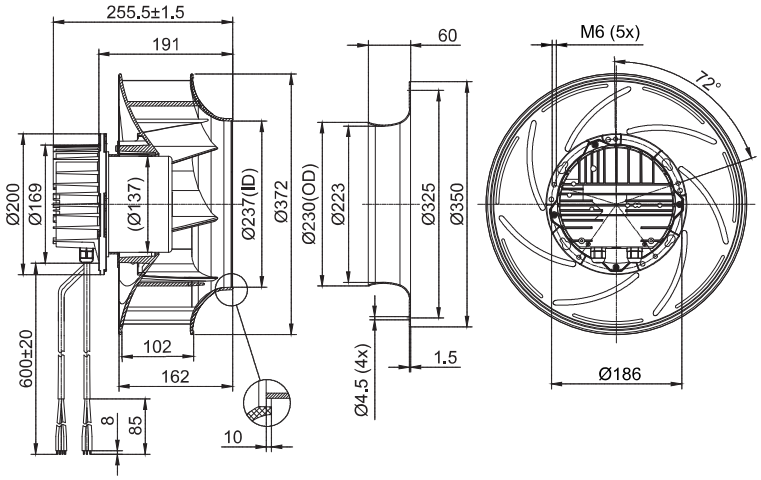

(支架离心风机Centrifugal Fan With Support Bracket)
FK3G355-2APK-60

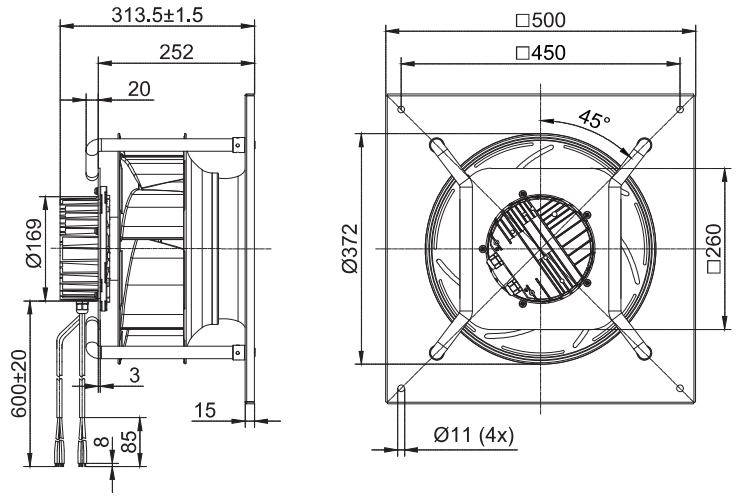

(支架离心风机Centrifugal Fan With Support Bracket)
FK3G355-4APK-30

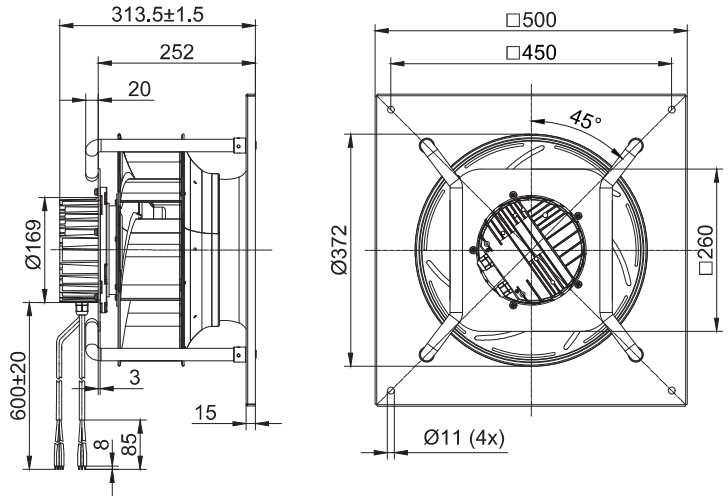



EC Backward Centrifugal Fans D400

– 材料**Material:** 塑料/铝合金
风轮**Impeller:** Plastic/Aluminium alloy
转子 Rotor: 电泳**E**lectrophoresis
端盖 Electronics housing: 压铸铝Die-cast aluminium
– 叶片数量**Number of blades:** 7/8
– 防护等级**Degree of protection:** IP 54
– 绝缘等级**Insulation class:** B/F
– 安装位置**Installation position:** 任意Any
– 模式**Mode:**连续工作制 Continuous operation (S1)

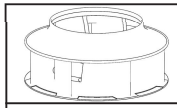	电机 **Motor**	曲线 **Curve**	额定电压 **Nominal voltage**	额定电压范围 **Nominal Voltage Range**	频率 **Frequency**	电流 **Current**	转速 **Speed**	输入功率 **Max. input Power**
Type			VAC	VAC	HZ	A	RPM	W
FB3G400-2AAP-20	BLEC102	Ⓐ	230	184~270	50/60	2.1	1500	300
FB3G400-2AAB-67	BLEC102	Ⓑ	230	184~270	50/60	3.1	1800	700
FB3G400-4AAL-80	BLEC188	Ⓒ	380	304~456	50/60	3.5	2450	2000
FB3G400-2APK-20	BLEC102	Ⓓ	230	184~270	50/60	2.2	1500	500
FB3G400-2APK-60	BLEC102	Ⓔ	230	184~270	50/60	3.3	1700	750
FB3G400-4APK-30	BLEC137	Ⓕ	380	304~456	50/60	2.1	2060	1320

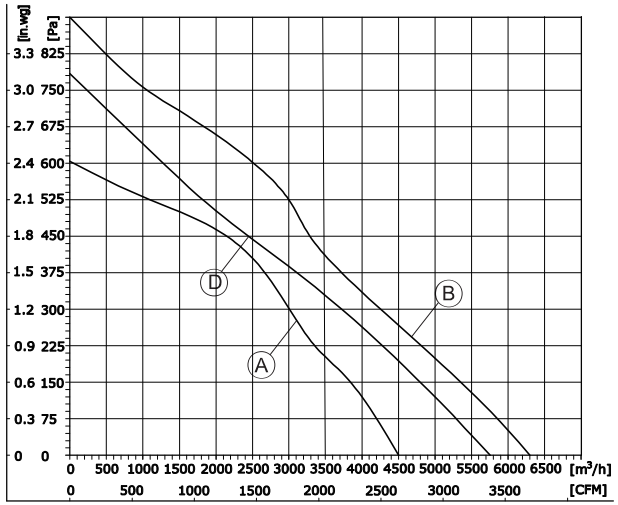

1、Air performance measured according to: ISO 5801, with DJ inlet ring without contact protection.
2、Intake-side sound level: LpA measured at 1 m distance from fan axis. The values given are only applicable under the specifi ed measuring conditions and may differ depending on the installation conditions.

EC Backward Centrifugal Fans D400

– 旋转方向**Direction of rotation:** 正转，从转子方向Clockwise，viewed toward rotor
– 技术特性**Technical features:** 参见附图See connection diagram
– 泄漏电流**Touch curren:** < 3,5 mA
– 能效**Efficiency:** ErP2015
– 标准/证书**Valid For Approval/Standard**：CE,RoHS,ISO9001
环境温度**Perm. ambient temp.**：**.**-25℃~+60℃
– 安装**Mounting:** 免维护滚珠轴承Maintenance-free ball bearings

噪音等级 **Sound Pressure Level**	风量 **Air Flow**	风压 **Air Pressure**	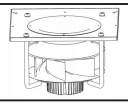	速度控制 **Speed Control**	接线图 **Wiring Mode**
dB(A)	m³/h	Pa	with support bracket		
76.9	4494	604	FK3G400-2AAP-20	0-10VDC PWM Modbus485	F3,F5
79	6300	900	FK3G400-2AAB-67		F7
89	8400	1260	FK3G400-4AAL-80		F8
80	5755	785	FK3G400-2APK-20		F3,F5
83	6350	950	FK3G400-2APK-60		F7
89	6950	980	FK3G400-4APK-30		F8

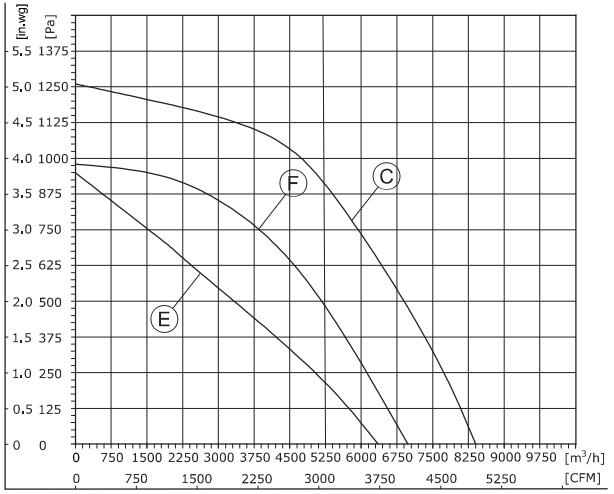

1、Air performance measured according to: ISO 5801, with DJ inlet ring without contact protection.
2、Intake-side sound level: LpA measured at 1 m distance from fan axis. The values given are only applicable under the specifi ed measuring conditions and may differ depending on the installation conditions.

(后向离心风机Centrifugal Fan)
FB3G400-2AAP-20

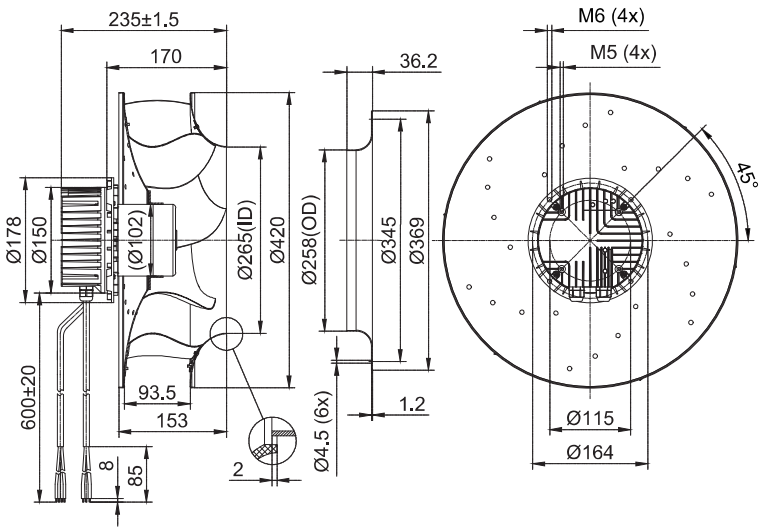

(后向离心风机Centrifugal Fan)
FB3G400-2AAB-67

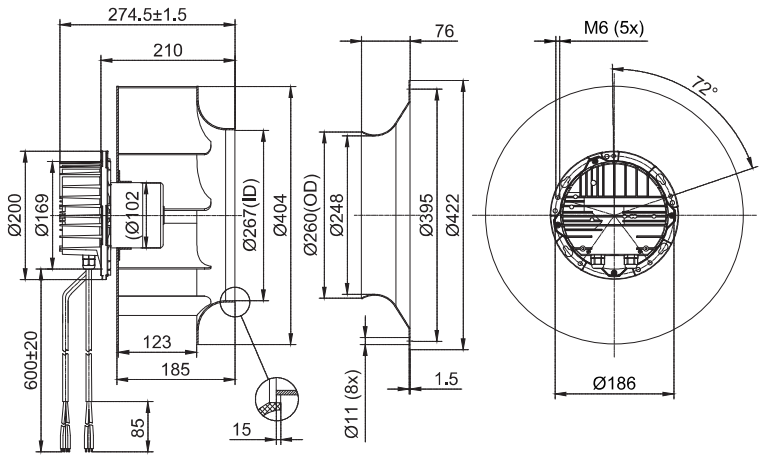

(支架离心风机Centrifugal Fan With Support Bracket)
FK3G400-2AAP-20

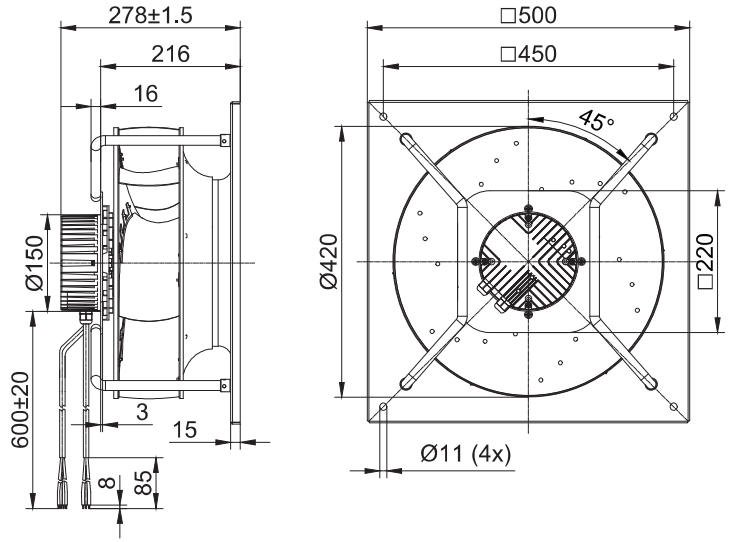

(支架离心风机Centrifugal Fan With Support Bracket)
FK3G400-2AAB-67

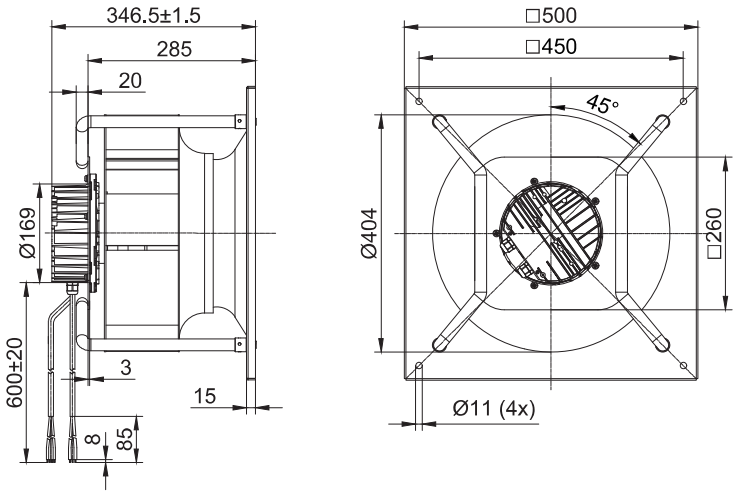

(后向离心风机Centrifugal Fan)
FB3G400-4AAL-80

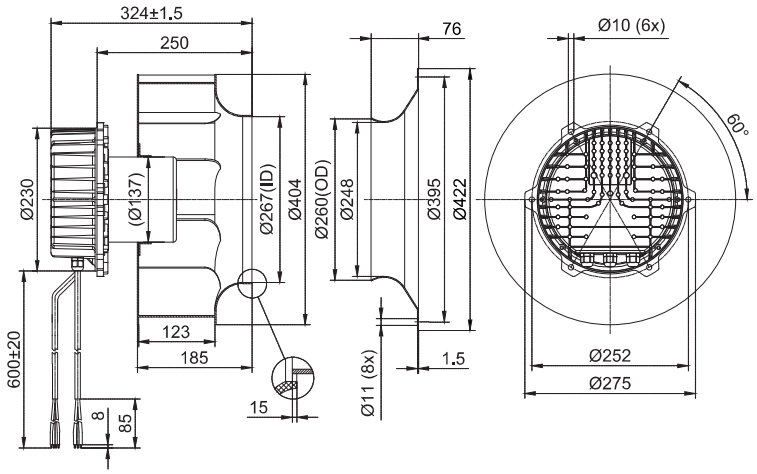

(后向离心风机Centrifugal Fan)
FB3G400-2APK-20

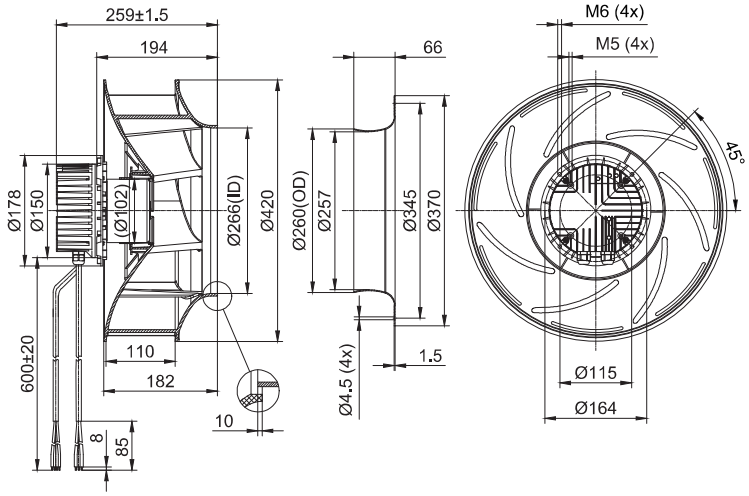

(支架离心风机Centrifugal Fan With Support Bracket)
FK3G400-4AAL-80

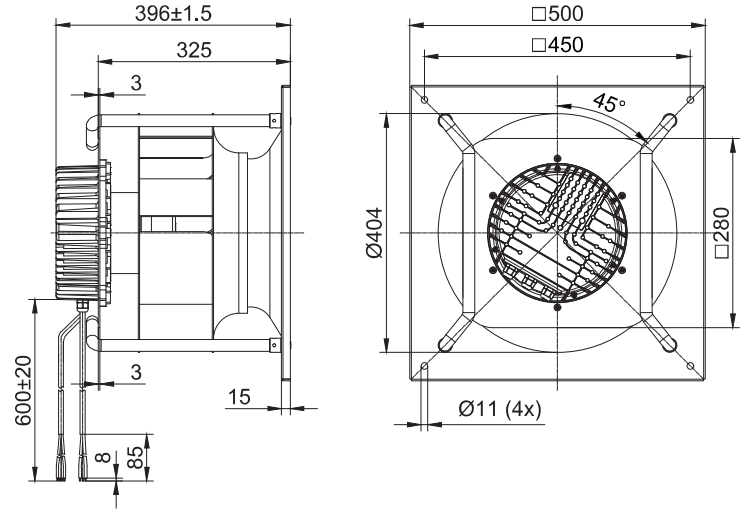

(支架离心风机Centrifugal Fan With Support Bracket)
FK3G400-2APK-20

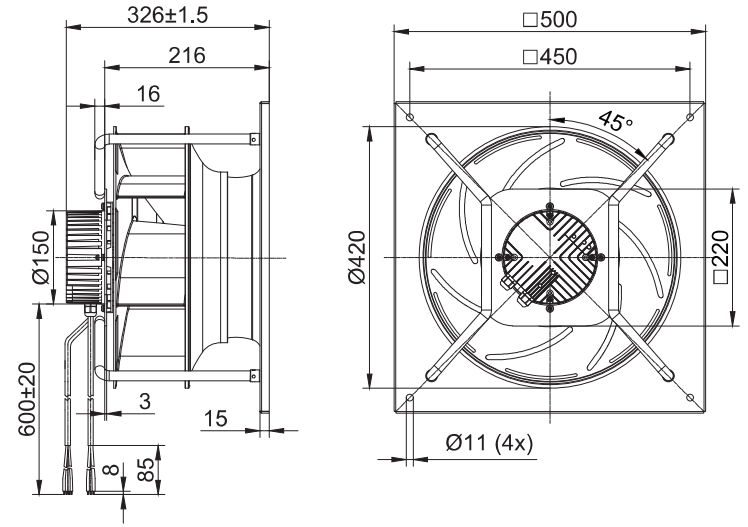

(后向离心风机Centrifugal Fan)
FB3G400-2APK-60

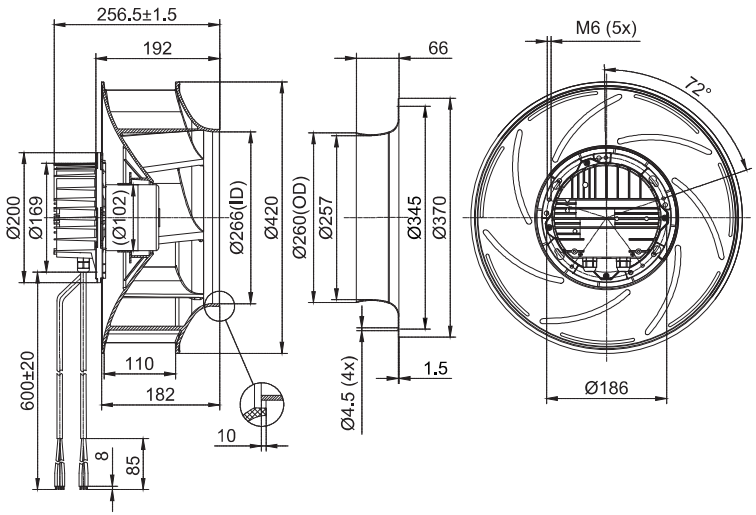

(后向离心风机Centrifugal Fan)
FB3G400-4APK-30

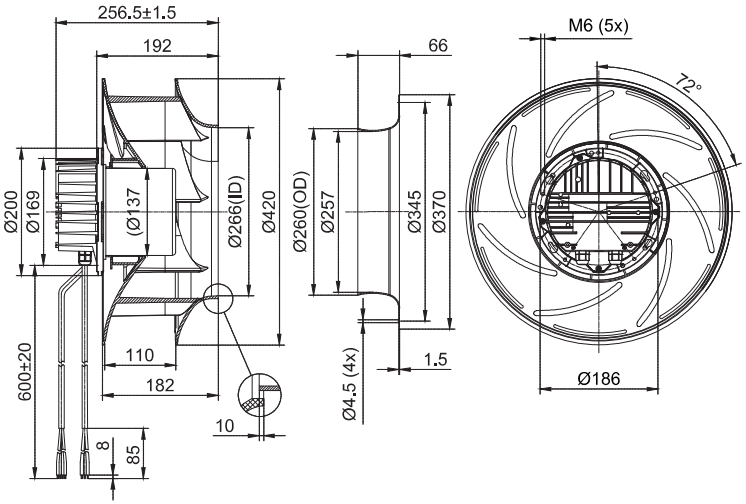

(支架离心风机Centrifugal Fan With Support Bracket)
FK3G400-2APK-60

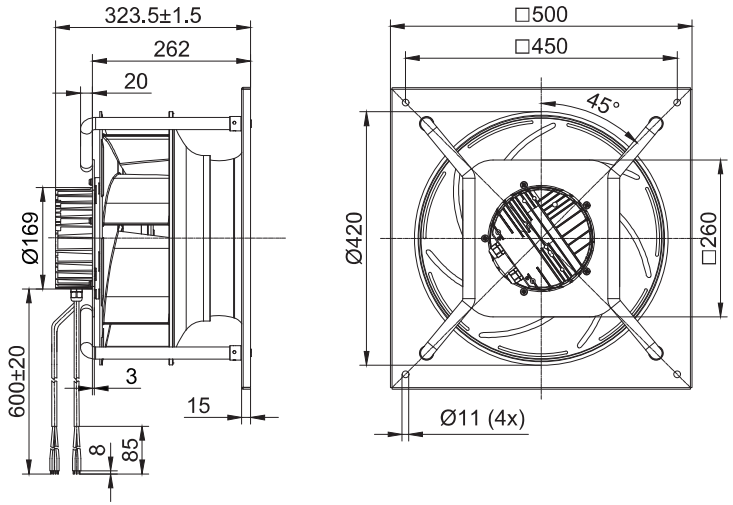

(支架离心风机Centrifugal Fan With Support Bracket)
FK3G400-4APK-30

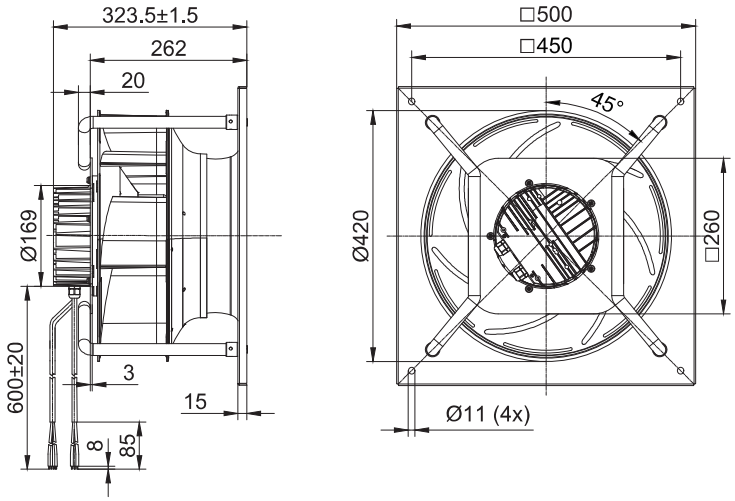

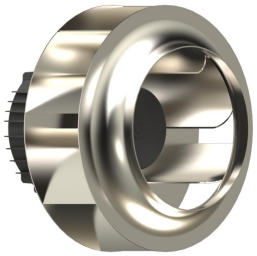

EC Backward Centrifugal Fans D450

– 材料**Material:** 铝合金　风轮**Impeller:** Aluminium alloy
　转子 Rotor: 电泳Electrophoresis
　端盖 Electronics housing: 压铸铝Die-cast aluminium
– 叶片数量**Number of blades:** 6/8
– 防护等级**Degree of protection:** IP 54
– 绝缘等级**Insulation class:** B/F
– 安装位置**Installation position:** 任意Any
– 模式**Mode:**连续工作制 Continuous operation (S1)

	电机 **Motor**	曲线 **Curve**	额定电压 **Nominal Voltage**	额定电压范围 **Nominal Voltage Range**	频率 **Frequency**	电流 **Current**	转速 **Speed**	输入功率 **Max. input Power**
Type			VAC	VAC	Hz	A	RPM	W
FB3G450-2AAL-20	BLEC102	Ⓐ	230	184~270	50/60	2.1	1300	500
FB3G450-2AAY-30	BLEC137	Ⓑ	230	184~270	50/60	3.2	1450	700
FB3G450-4AAY-30	BLEC137	Ⓒ	380	304~456	50/60	1.67	1450	1000
FB3G450-4AAY-80	BLEC188	Ⓓ	380	304~456	50/60	2.2	1700	1200

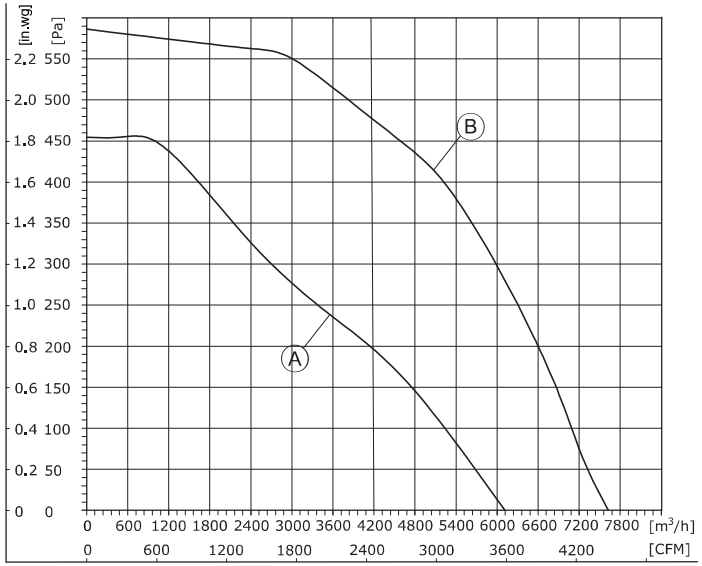

1、Air performance measured according to: ISO 5801, with DJ inlet ring without contact protection.
2、Intake-side sound level: LpA measured at 1 m distance from fan axis. The values given are only applicable under the specifi ed measuring conditions and may differ depending on the installation conditions.

EC Centrifugal Fans

EC Centrifugal Fan

EC Backward Centrifugal Fans D450

– 旋转方向**Direction of rotation:** 正转，从转子方向Clockwise，viewed toward rotor
– 技术特性**Technical features:** 参见附图See connection diagram
– 泄漏电流**Touch curren:** < 3,5 mA
– 能效**Efficiency:** ErP2015
– 标准/证书**Valid For Approval/Standard**：CE,RoHS,ISO9001
　环境温度**Perm. ambient temp.**：.-25℃~+60℃
– 安装**Mounting:** 免维护滚珠轴承Maintenance-free ball bearings

噪音等级 **Sound Pressure Level**	风量 **Air Flow**	风压 **Air Pressure**	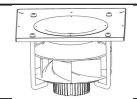	速度控制 **Speed Control**	接线图 **Wiring Mode**
dB(A)	m³/h	Pa	with support bracket		
76	6110	455	FK3G133-2APL-50	0-10VDC PWM Modbus485	F3,F5
80	7626	587	FK3G133-2APL-51		F7
80	7700	665	FK3G133-2APL-70		F8
89	8400	815	FK3G133-2APL-70		F8

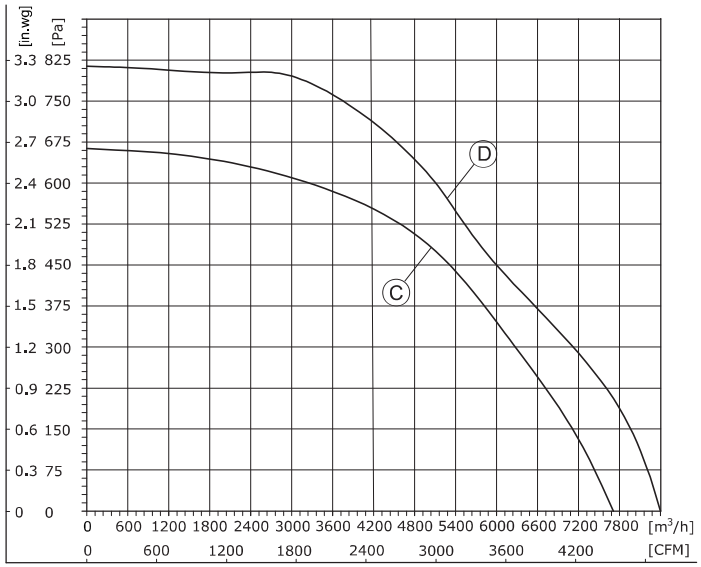

1、Air performance measured according to: ISO 5801, with DJ inlet ring without contact protection.
2、Intake-side sound level: LpA measured at 1 m distance from fan axis. The values given are only applicable under the specifi ed measuring conditions and may differ depending on the installation conditions.

(后向离心风机Centrifugal Fan)
FB3G450-2AAL-20

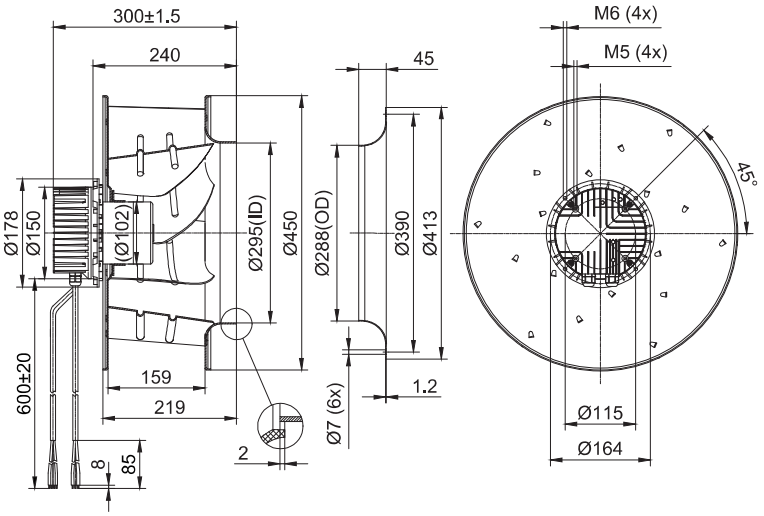

(后向离心风机Centrifugal Fan)
FB3G450-2AAY-30

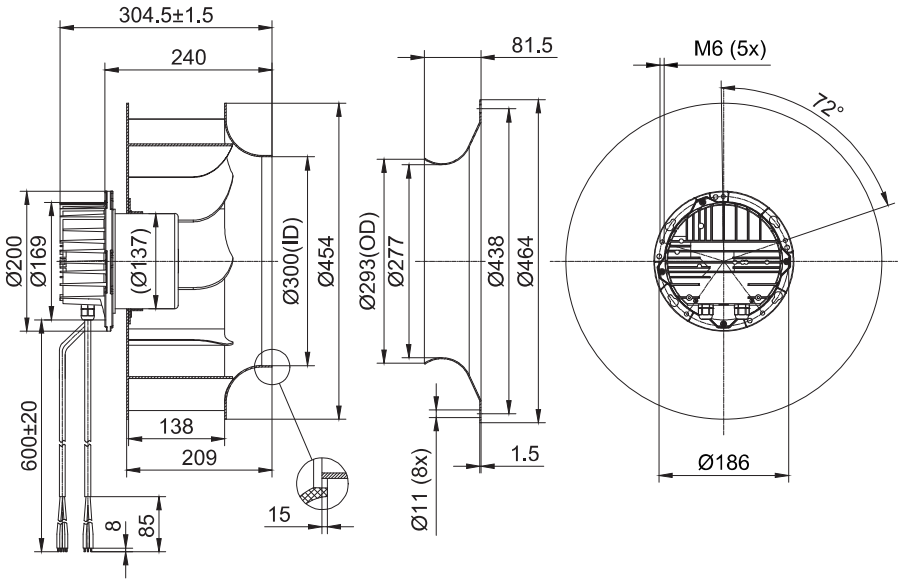

(支架离心风机Centrifugal Fan With Support Bracket)
FK3G450-2AAL-20

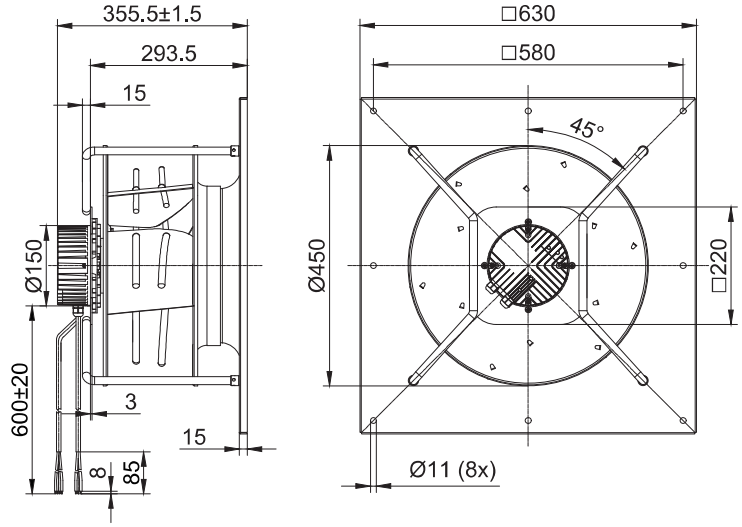

(支架离心风机Centrifugal Fan With Support Bracket)
FK3G450-2AAY-30

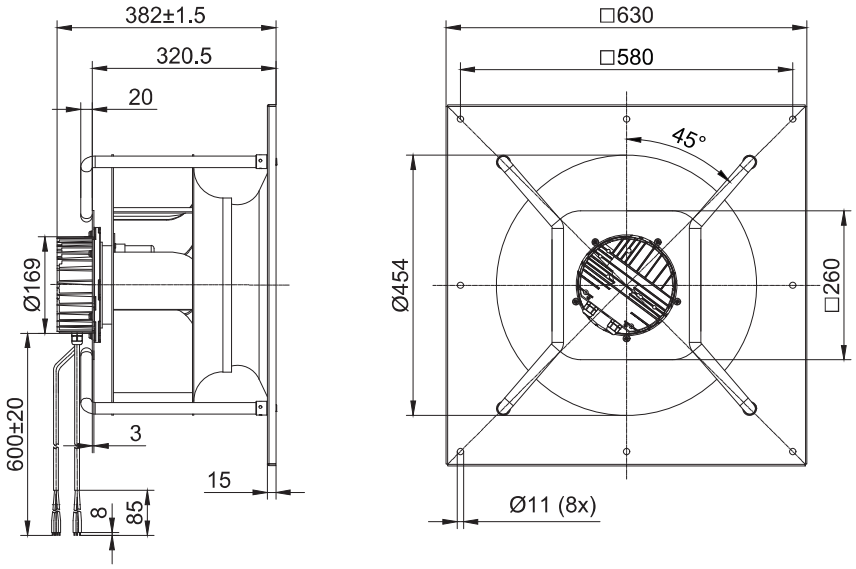

(后向离心风机Centrifugal Fan)
FB3G450-4AAY-30

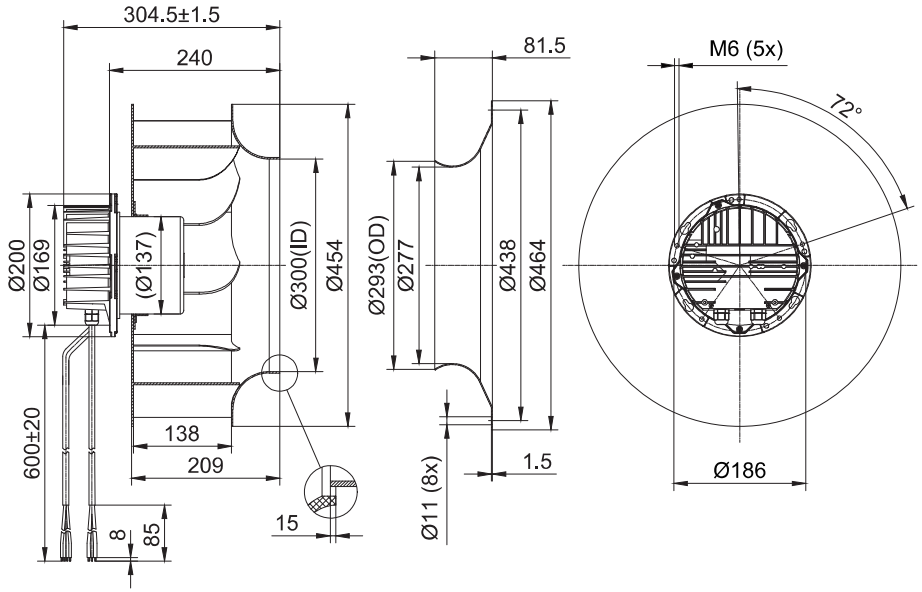

(后向离心风机Centrifugal Fan)
FB3G450-4AAY-80

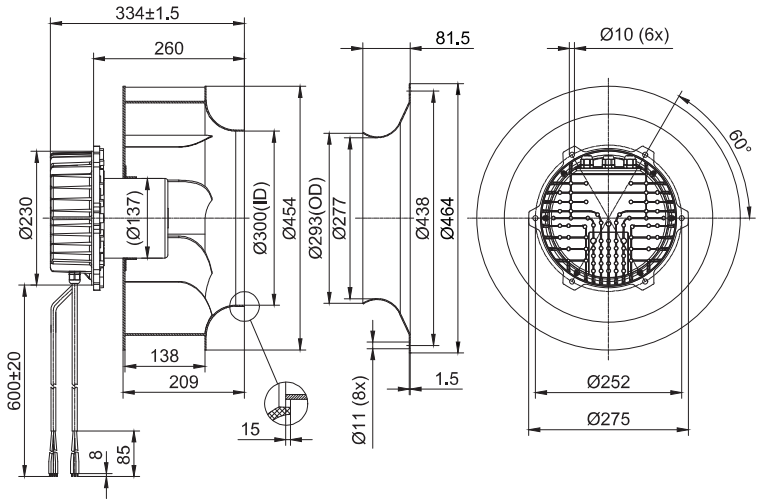

(支架离心风机Centrifugal Fan With Support Bracket)
FK3G450-4AAY-30

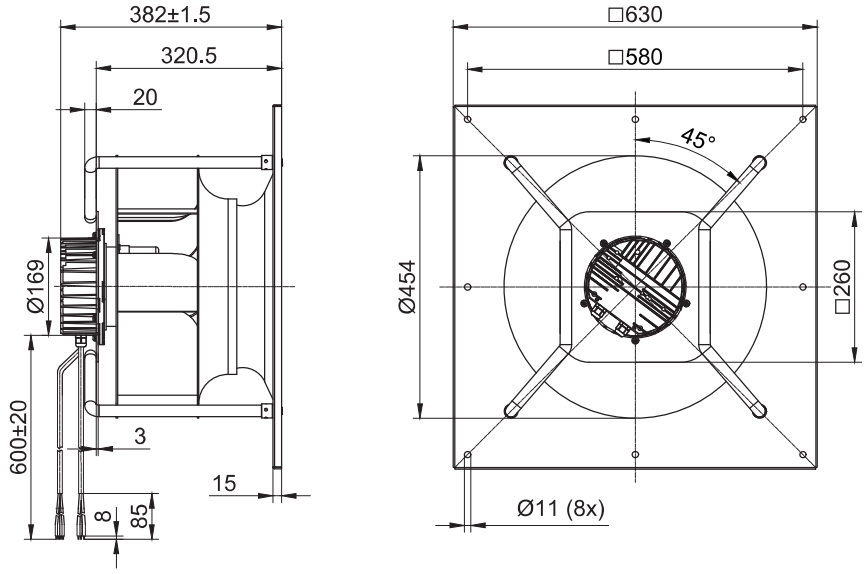

(支架离心风机Centrifugal Fan With Support Bracket)
FK3G450-4AAY-80

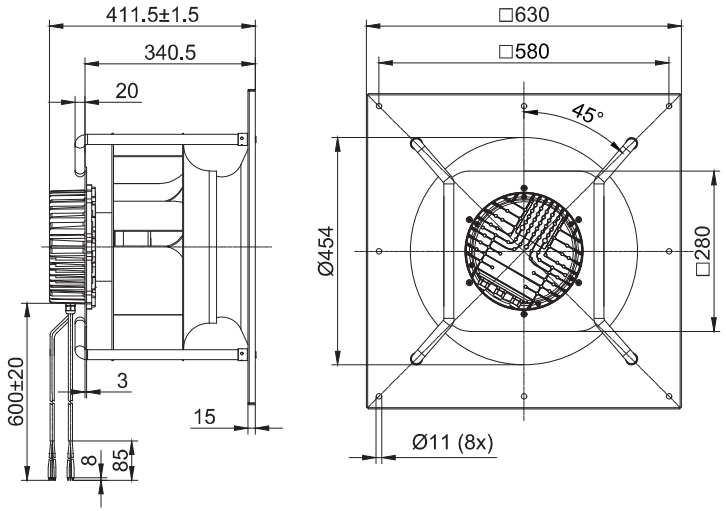

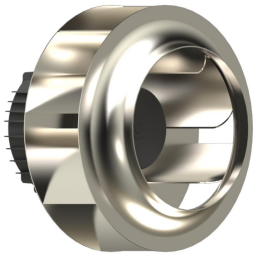

EC Backward Centrifugal Fans D500

– 材料**Material:** 铝合金 风轮**Impeller:** Aluminium alloy
转子 Rotor: 电泳Electrophoresis
端盖 Electronics housing: 压铸铝Die-cast aluminium
– 叶片数量**Number of blades:** 8
– 防护等级**Degree of protection:** IP 54
– 绝缘等级**Insulation class:** F
– 安装位置**Installation position:** 任意Any
– 模式**Mode:**连续工作制 Continuous operation (S1)

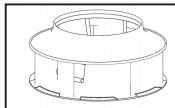	电机 **Motor**	曲线 **Curve**	额定电压 **Nominal Voltage**	额定电压范围 **Nominal Voltage Range**	频率 **Frequency**	电流 **Current**	转速 **Speed**	输入功率 **Max. input Power**
Type			VAC	VAC	Hz	A	RPM	W
FB3G500-4AAL-30	BLEC137	Ⓐ	380	304~456	50/60	1.45	1100	850
FB3G500-4AAL-80	BLEC188	Ⓑ	380	304~456	50/60	2.7	1400	1650

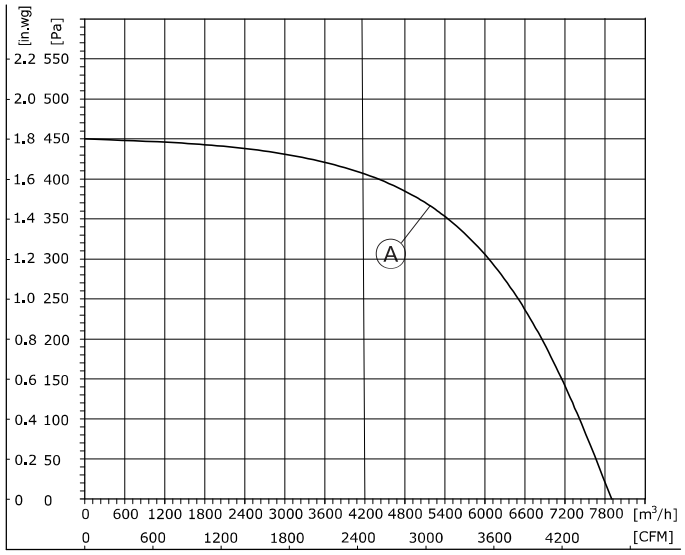

1、Air performance measured according to: ISO 5801, with DJ inlet ring without contact protection.
2、Intake-side sound level: LpA measured at 1 m distance from fan axis. The values given are only applicable under the specifi ed measuring conditions and may differ depending on the installation conditions.

EC Backward Centrifugal Fans D500

– 旋转方向**Direction of rotation:** 正转，从转子方向Clockwise，viewed toward rotor
– 技术特性**Technical features:** 参见附图See connection diagram
– 泄漏电流**Touch curren:** < 3,5 mA
– 能效**Efficiency:** ErP2015
– 标准/证书**Valid For Approval/Standard**：CE,RoHS,ISO9001
环境温度**Perm. ambient temp.**：.-25℃~+60℃
– 安装**Mounting:** 免维护滚珠轴承Maintenance-free ball bearings

噪音等级 **Sound pressure level**	风量 **Air Flow**	风压 **Air pressure**	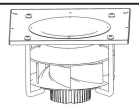	速度控制 **Speed Control**	接线图 **Wiring Mode**
dB(A)	m³/h	Pa	with support bracket	0-10VDC PWM Modbus485	
83.5	7900	450	FK3G500-4AAL-30		F8
86	9000	750	FK3G500-4AAL-80		F8

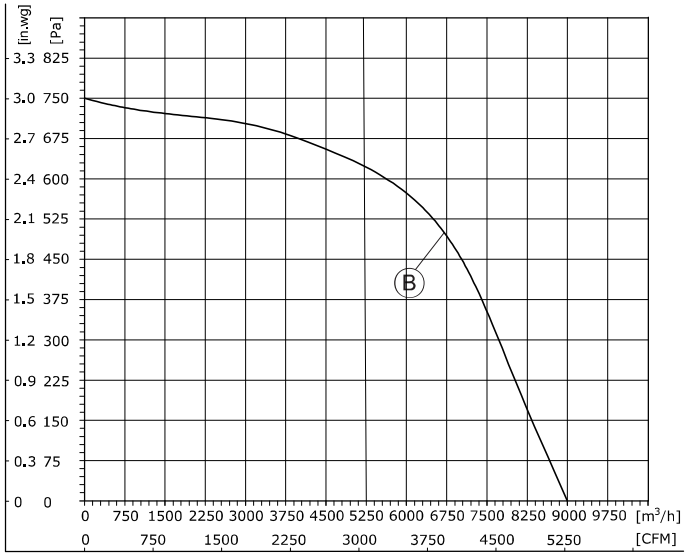

1、Air performance measured according to: ISO 5801, with DJ inlet ring without contact protection.
2、Intake-side sound level: LpA measured at 1 m distance from fan axis. The values given are only applicable under the specifi ed measuring conditions and may differ depending on the installation conditions.

(后向离心风机Centrifugal Fan)
FB3G500-4AAL-30

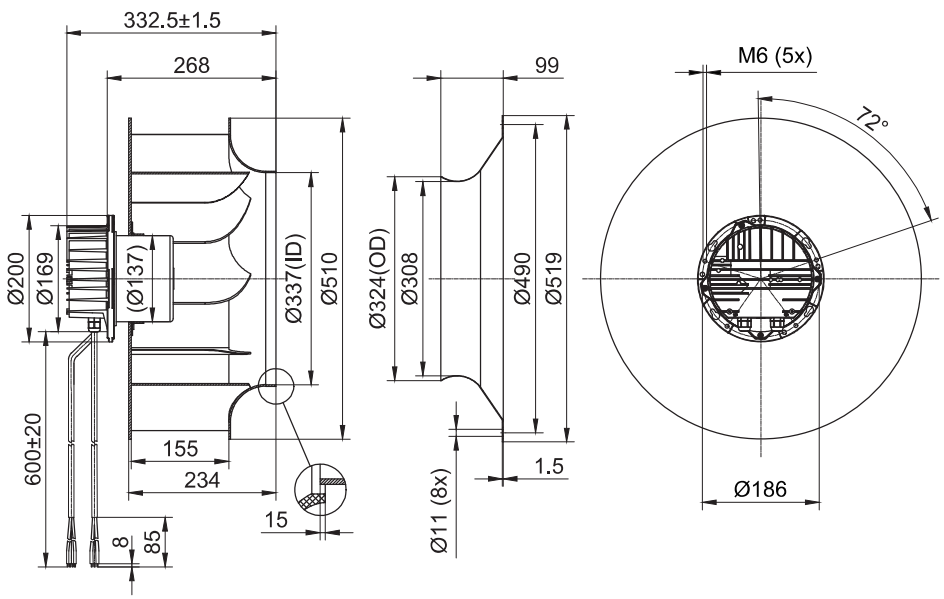

(后向离心风机Centrifugal Fan)
FB3G500-4AAL-80

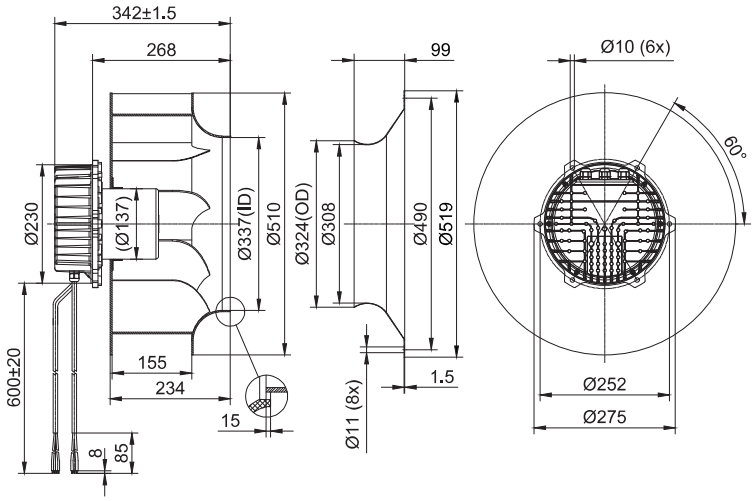

(支架离心风机Centrifugal Fan With Support Bracket)
FK3G500-4AAL-30

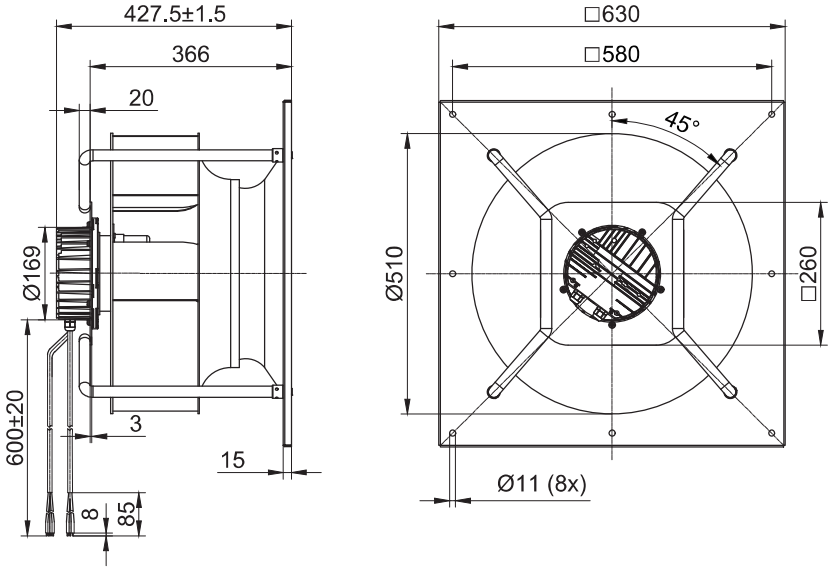

(支架离心风机Centrifugal Fan With Support Bracket)
FK3G500-4AAL-80

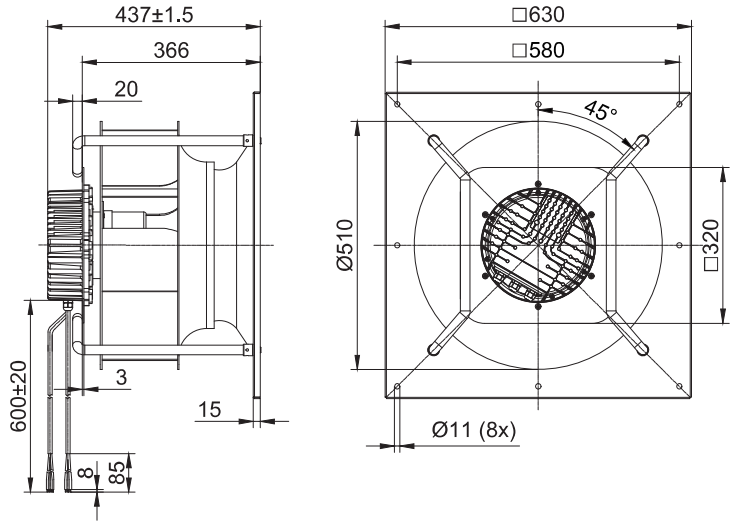

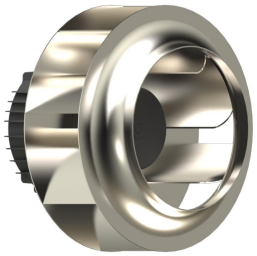

EC Backward Centrifugal Fans D560

- 材料**Material:** 铝合金 风轮**Impeller:**Aluminium alloy
  转子 Rotor: 电泳Electrophoresis
  端盖 Electronics housing: 压铸铝Die-cast aluminium
- 叶片数量**Number of blades:** 8
- 防护等级**Degree of protection:** IP 54
- 绝缘等级**Insulation class:** F
- 安装位置**Installation position:** 任意Any
- 模式**Mode:**连续工作制 Continuous operation (S1)

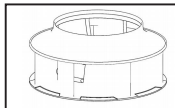	电机 **Motor**	曲线 **Curve**	额定电压 **Nominal Voltage**	额定电压范围 **Nominal Voltage Range**	频率 **Frequency**	电流 **Current**	转速 **Speed**	输入功率 **Max. input Power**
Type			VAC	VAC	Hz	A	RPM	W
FB3G560-4AAL-30	BLEC137	Ⓐ	380	304~456	50/60	2.5	1300	1500
FB3G560-4AAL-80	BLEC188	Ⓑ	380	304~456	50/60	3.15	1450	2000

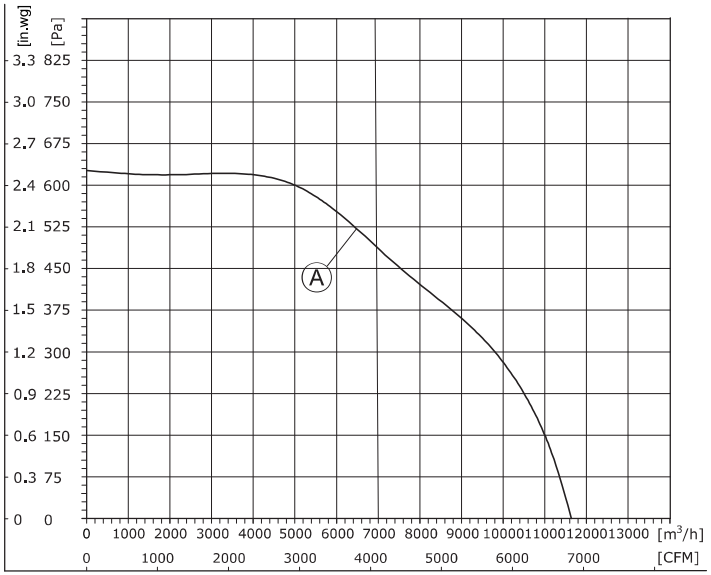

1、Air performance measured according to: ISO 5801, with DJ inlet ring without contact protection.
2、Intake-side sound level: LpA measured at 1 m distance from fan axis. The values given are only applicable under the specifi ed measuring conditions and may differ depending on the installation conditions.

EC Backward Centrifugal Fans D560

- 旋转方向**Direction of rotation:** 正转，从转子方向Clockwise，viewed toward rotor
- 技术特性**Technical features:** 参见附图See connection diagram
- 泄漏电流**Touch curren:** < 3,5 mA
- 能效**Efficiency:** ErP2015
- 标准/证书**Valid For Approval/Standard**：CE,RoHS,ISO9001
  环境温度**Perm. ambient temp.**：.-25℃~+60℃
- 安装**Mounting:** 免维护滚珠轴承Maintenance-free ball bearings

噪音等级 **Sound pressure level**	风量 **Air Flow**	风压 **Air pressure**	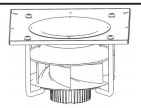	速度控制 **Speed Control**	接线图 **Wiring Mode**
dB(A)	m³/h	Pa	with support bracket	0-10VDC PWM Modbus485	
83	11610	625	FK3G560-4AAL-30		F8
86	12800	880	FK3G560-4AAL-80		F8

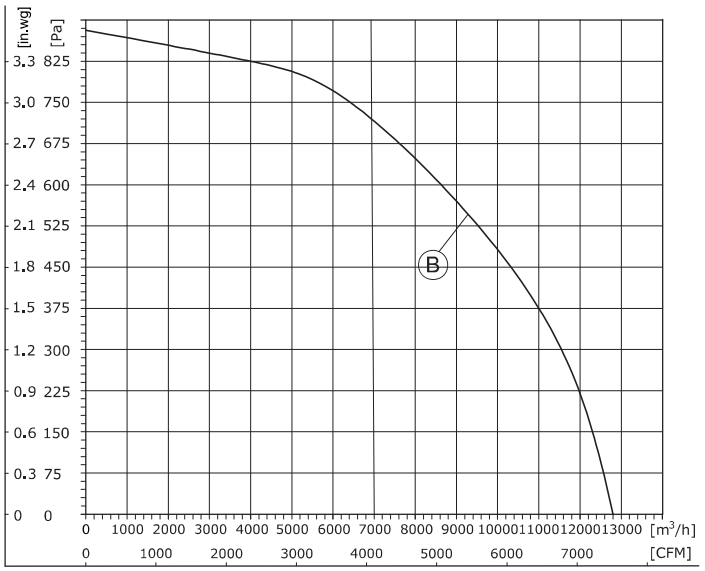

1、Air performance measured according to: ISO 5801, with DJ inlet ring without contact protection.
2、Intake-side sound level: LpA measured at 1 m distance from fan axis. The values given are only applicable under the specifi ed measuring conditions and may differ depending on the installation conditions.

(后向离心风机Centrifugal Fan)
FB3G560-4AAL-30

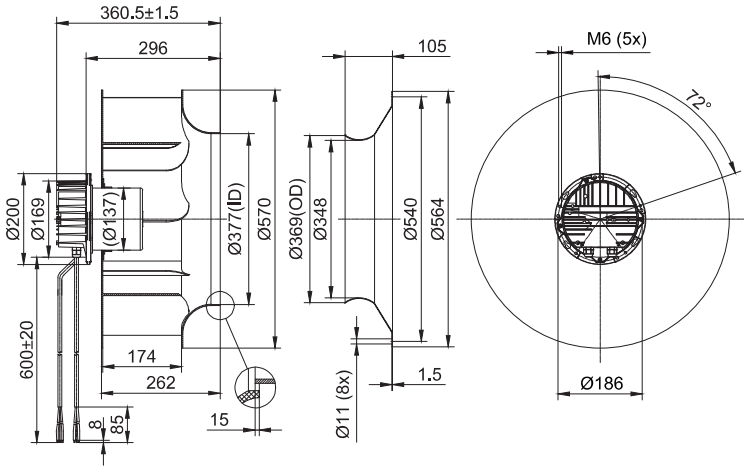

(后向离心风机Centrifugal Fan)
FB3G560-4AAL-80

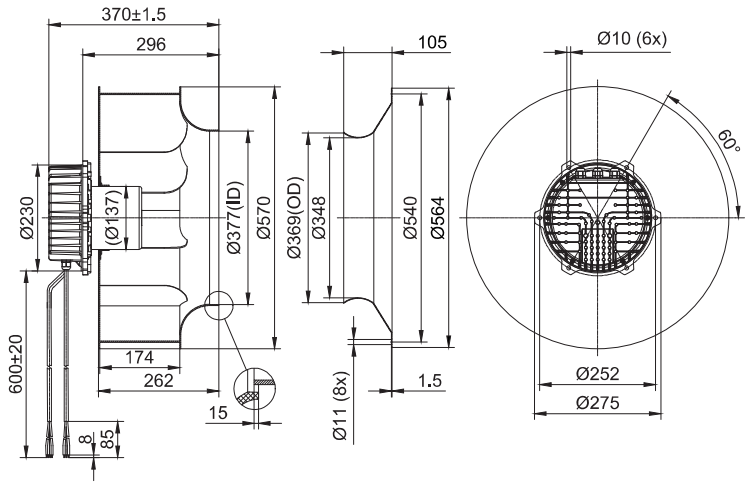

(支架离心风机Centrifugal Fan With Support Bracket)
FK3G560-4AAL-30

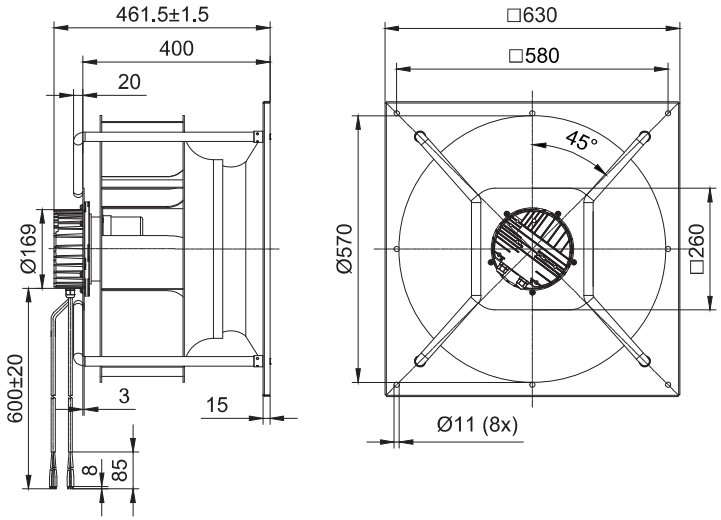

(支架离心风机Centrifugal Fan With Support Bracket)
FK3G560-4AAL-80

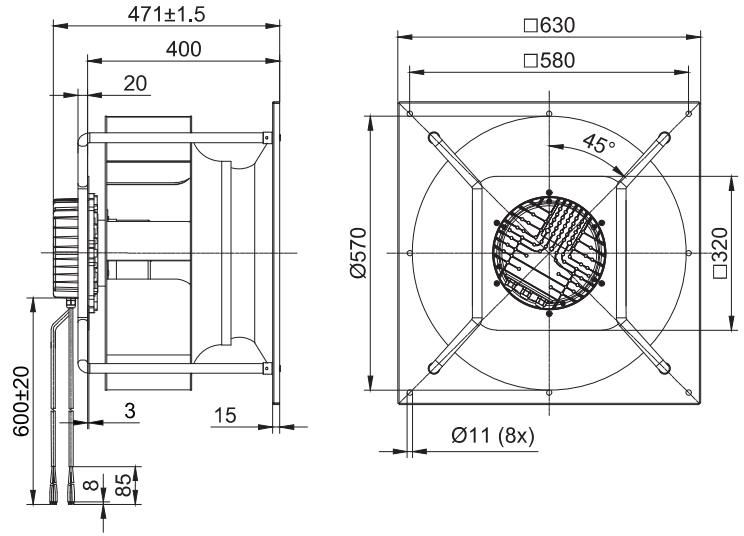








流动的清新，尽享效率之美

A Moveable Freshness

Enjoying The Beauty Of Efficiency To The Fullest

FANOVA

苏州鑫恒鑫电机有限公司

Fanova(Suzhou) Motor Technology Co., LTD

地址/ADD：中国江苏省苏州市相城经济开发区富元路739号7号楼2楼，邮编：215100

2ND FLOOR BUILDING7,NO.739.FUYUAN ROAD ECONOMIC DEVELOPMENT ZONE XIANGCHENG DISTRICT,SUZHOU CITY,JIANGSU PROVINCE,PR.CHINA

电话/TEL：+86 - 512 - 66152110

邮箱/E-MAIL：sales01 @fanova-tech.com 网址/Website：www.fanova-tech.com