

SERVICE PUBLICITY

苏州鑫恒鑫电机有限公司

FAN MANUFACTURING EXPERT

FANOVA(SUZHOU) MOTOR TECHNOLOGY CO., LTD



EC-DC Series



DC Backward Centrifugal Fans D133

– 材料**Material:** 塑料风轮Impeller: Plastic
转子 Rotor: 电泳Electrophoresis
端盖 Electronics housing: 压铸铝Die-cast aluminium
– 叶片数量**Number of blades:** 7
– 防护等级**Degree of protection:** IP 44
– 绝缘等级**Insulation class:** B
– 安装位置**Installation position:** 任意Any
– 模式**Mode:**连续工作制 Continuous operation (S1)

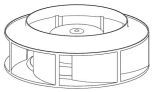	电机 **Motor**	曲线 **Curve**	额定电压 **Nominal Voltage**	额定电压范围 **Nominal Voltage Range**	电流 **Current**	转速 **Speed**	输入功率 **Max. input Power**
Type			VDC	VDC	A	RPM	W
FB3G133-24PL-70	BLDC72	Ⓐ	24	16~28	1.2	3800	28
FB3G133-48PL-70	BLDC72	Ⓐ	48	36~57	0.6	3800	28
FB3G133-24PL-71	BLDC72	Ⓑ	24	16~28	1.75	4460	42
FB3G133-48PL-71	BLDC72	Ⓑ	48	36~57	0.875	4460	42

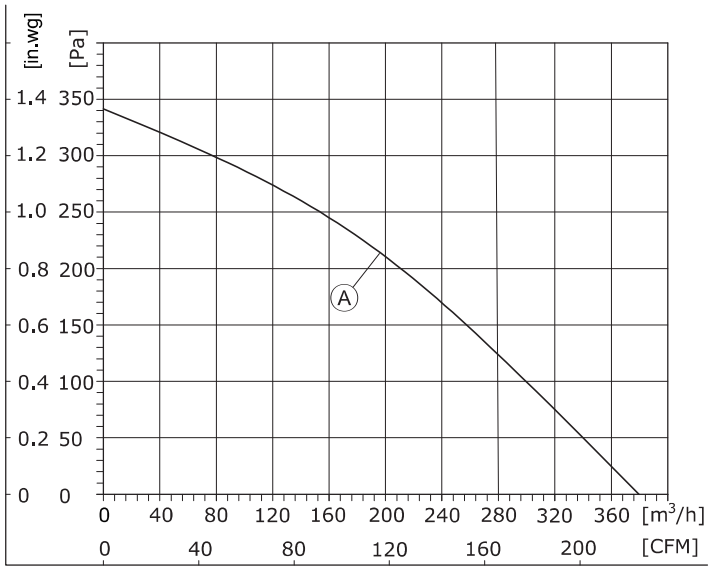

1、Air performance measured according to: ISO 5801, with DJ inlet ring without contact protection.
2、Intake-side sound level: LpA measured at 1 m distance from fan axis. The values given are only applicable under the specifi ed measuring conditions and may differ depending on the installation conditions.

DC Backward Centrifugal Fans D133

– 旋转方向**Direction of rotation:** 正转，从转子方向Clockwise，viewed toward rotor
– 技术特性**Technical features:** 参见附图See connection diagram
– 泄漏电流**Touch curren:** < 3,5 mA
– 能效**Efficiency:** ErP2015
– 标准/证书**Valid For Approval/Standard**：CE,RoHS,ISO9001
环境温度**Perm. ambient temp.**：.-25℃~+60℃
– 安装**Mounting:** 免维护滚珠轴承Maintenance-free ball bearings

噪音等级 **Sound Pressure Level**	风量 **Air Flow**	风压 **Air Pressure**	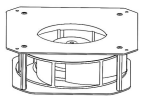	速度控制 **Speed Control**	接线图 **Wiring Mode**
dB(A)	m³/h	Pa	with support bracket		
63	380	343	FK3G133-24PL-70	0-10VDC PWM	S1
63	380	343	FK3G133-48PL-70		S1
73	425	490	FK3G133-24PL-71		S1
73	425	490	FK3G133-48PL-71		S1

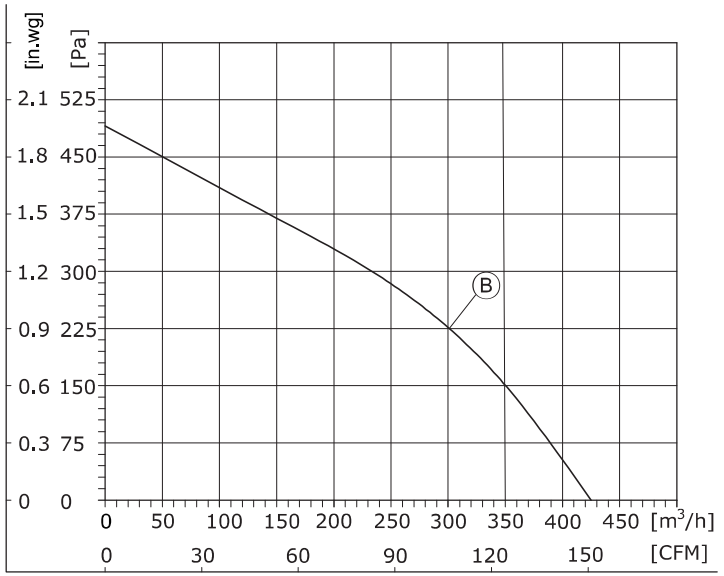

1、Air performance measured according to: ISO 5801, with DJ inlet ring without contact protection.
2、Intake-side sound level: LpA measured at 1 m distance from fan axis. The values given are only applicable under the specifi ed measuring conditions and may differ depending on the installation conditions.

(后向离心风机Centrifugal Fan)
FB3G133-24PL-70/FB3G133-48PL-70

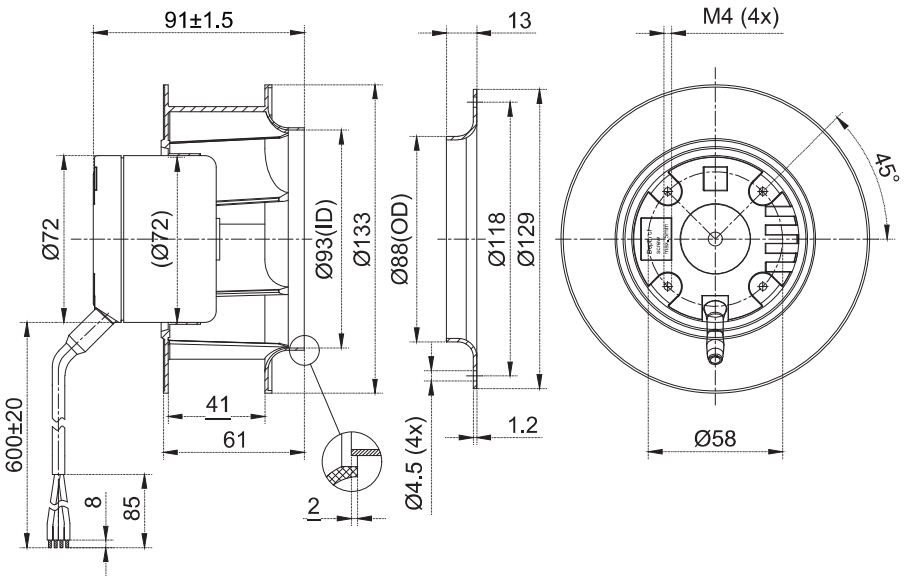

(后向离心风机Centrifugal Fan)
FB3G133-24PL-71/FB3G133-48PL-71

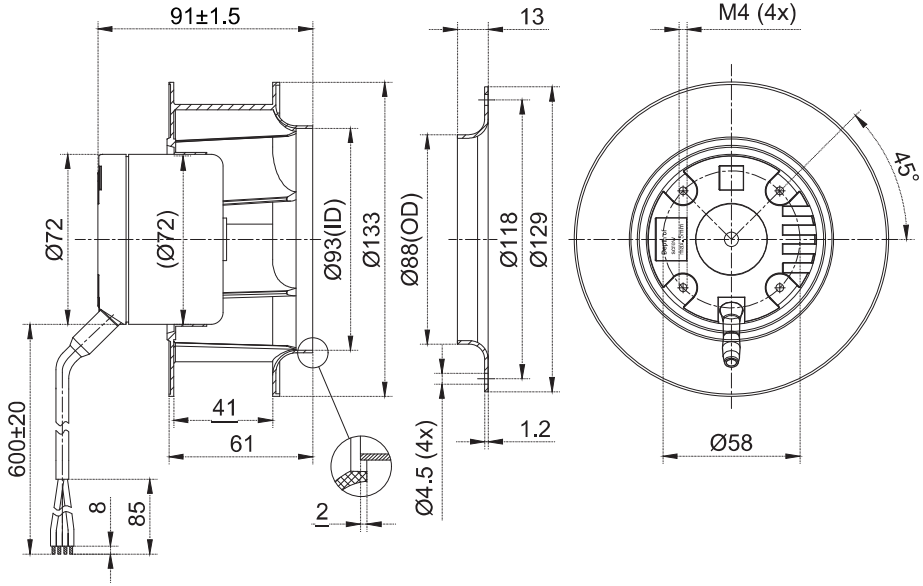

(支架离心风机Centrifugal Fan With Support Bracket)
FK3G133-24PL-70/FK3G133-48PL-70

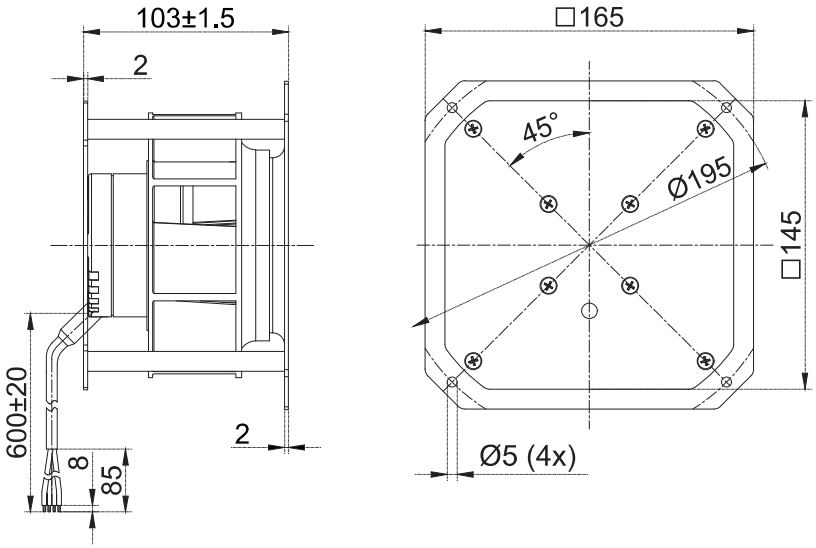

(支架离心风机Centrifugal Fan With Support Bracket)
FK3G133-24PL-71/FK3G133-48PL-71

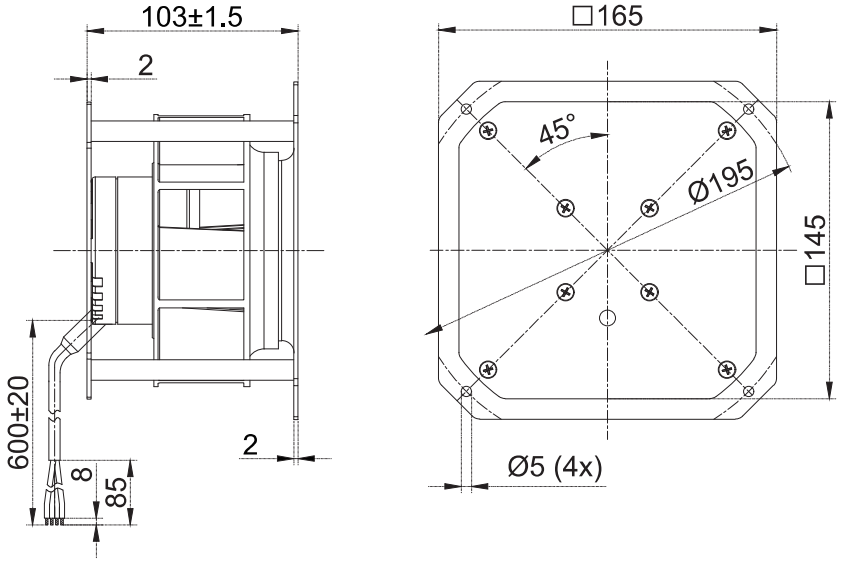



DC Backward Centrifugal Fans D175

– 材料**Material:** 塑料风轮Impeller: Plastic
转子 Rotor: 电泳Electrophoresis
端盖 Electronics housing: 压铸铝Die-cast aluminium
– 叶片数量**Number of blades:** 7
– 防护等级**Degree of protection:** IP 44
– 绝缘等级**Insulation class:** B
– 安装位置**Installation position:** 任意Any
– 模式**Mode:**连续工作制 Continuous operation (S1)

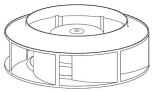	电机 **Motor**	曲线 **Curve**	额定电压 **Nominal Voltage**	额定电压范围 **Nominal Voltage Range**	电流 **Current**	转速 **Speed**	输入功率 **Max. input Power**
Type			VDC	VDC	A	RPM	W
FB3G175-24PY-70	BLDC72	Ⓐ	24	16~28	1.9	3300	44
FB3G175-48PY-70	BLDC72	Ⓐ	48	36~57	0.95	3300	44
FB3G175-24PY-71	BLDC72	Ⓑ	24	16~28	3.6	4250	86
FB3G175-48PY-71	BLDC72	Ⓑ	48	36~57	1.8	4250	86

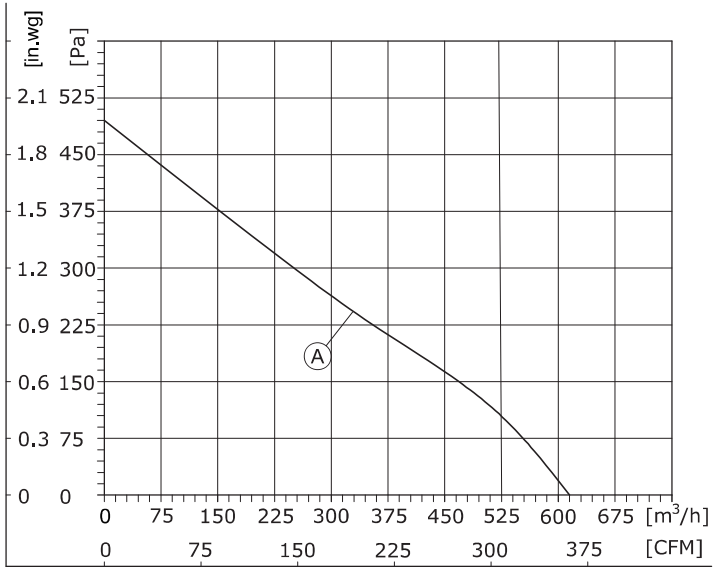

1、Air performance measured according to: ISO 5801, with DJ inlet ring without contact protection.
2、Intake-side sound level: LpA measured at 1 m distance from fan axis. The values given are only applicable under the specifi ed measuring conditions and may differ depending on the installation conditions.

DC Backward Centrifugal Fans D175

– 旋转方向**Direction of rotation:** 正转，从转子方向Clockwise，viewed toward rotor
– 技术特性**Technical features:** 参见附图See connection diagram
– 泄漏电流**Touch curren:** < 3,5 mA
– 能效**Efficiency:** ErP2015
– 标准/证书**Valid For Approval/Standard**：CE,RoHS,ISO9001
环境温度**Perm. ambient temp.**：**.**-25℃~+60℃
– 安装**Mounting:** 免维护滚珠轴承Maintenance-free ball bearings

噪音等级 **Sound Pressure Level**	风量 **Air Flow**	风压 **Air Pressure**	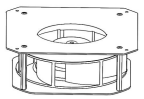	速度控制 **Speed Control**	接线图 **Wiring Mode**
dB(A)	m³/h	Pa	with support bracket		
68	615	492	FK3G175-24PY-70	0-10VDC PWM	S1
68	615	492	FK3G175-48PY-70		S1
73	715	610	FK3G175-24PY-71		S1
73	715	610	FK3G175-48PY-71		S1

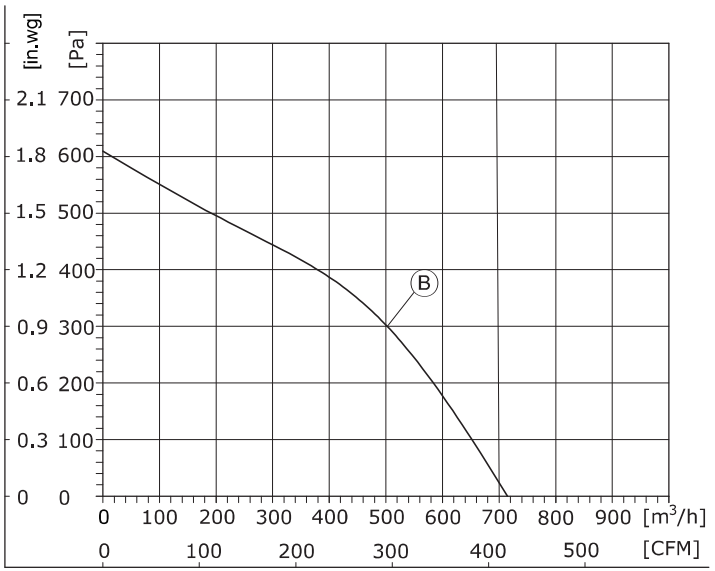

1、Air performance measured according to: ISO 5801, with DJ inlet ring without contact protection.
2、Intake-side sound level: LpA measured at 1 m distance from fan axis. The values given are only applicable under the specifi ed measuring conditions and may differ depending on the installation conditions.

(后向离心风机Centrifugal Fan)
FB3G175-24PY-70/FB3G175-48PY-70

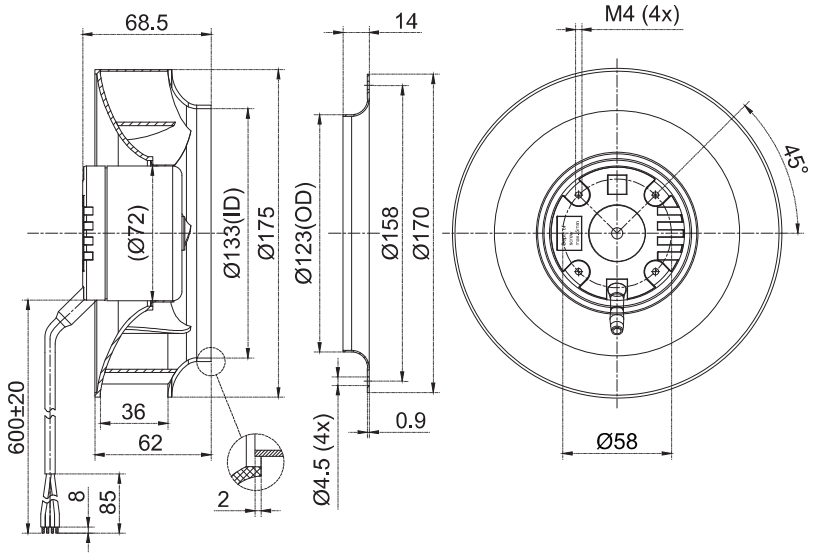

(后向离心风机Centrifugal Fan)
FB3G175-24PY-71/FB3G175-48PY-71

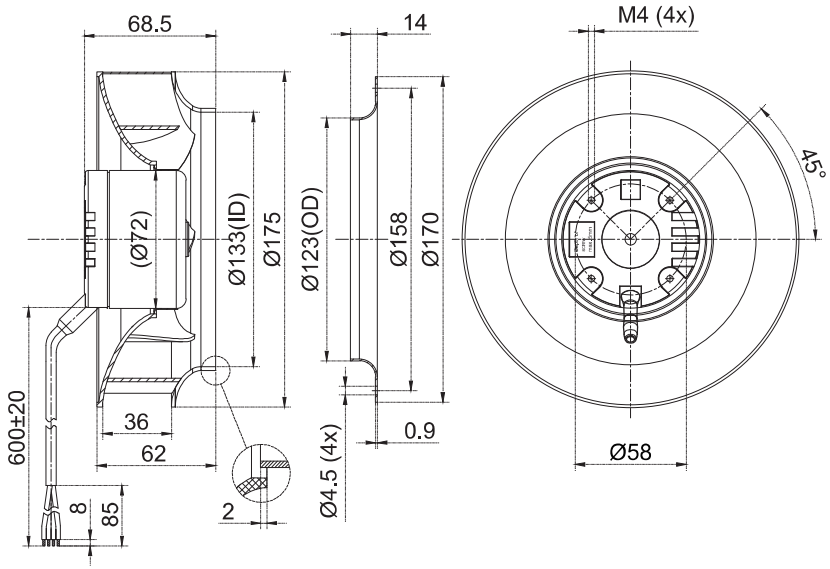

(支架离心风机Centrifugal Fan With Support Bracket)
FK3G175-24PY-70/FK3G175-48PY-70

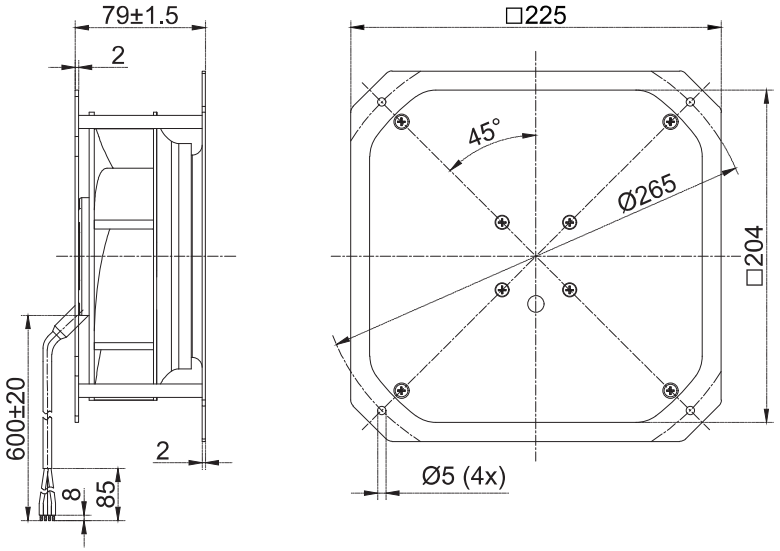

(支架离心风机Centrifugal Fan With Support Bracket)
FK3G175-24PY-71/FK3G175-48PY-71

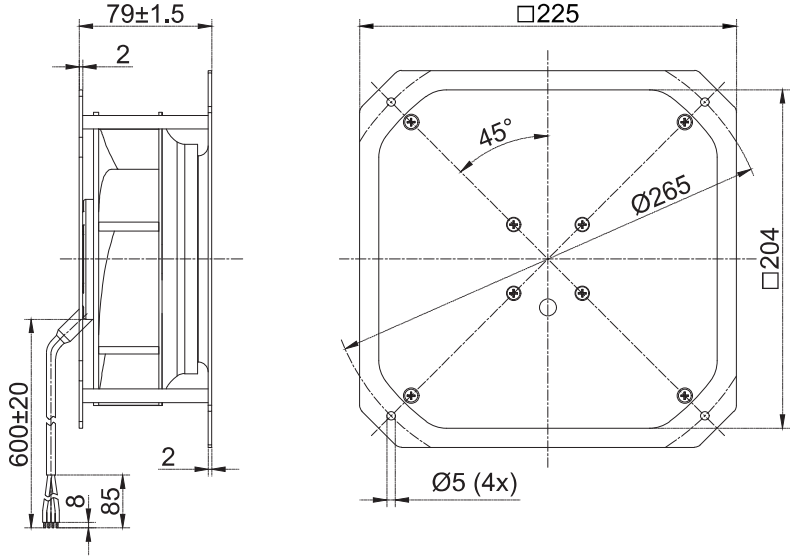

DC Centrifugal Fan



DC Backward Centrifugal Fans D190

– 材料**Material:** 塑料风轮Impeller: Plastic
转子 Rotor: 电泳Electrophoresis
端盖 Electronics housing: 压铸铝Die-cast aluminium
– 叶片数量**Number of blades:** 7
– 防护等级**Degree of protection:** IP 44
– 绝缘等级**Insulation class:** B
– 安装位置**Installation position:** 任意Any
– 模式**Mode:**连续工作制 Continuous operation (S1)

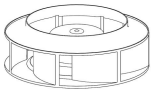	电机 **Motor**	曲线 **Curve**	额定电压 **Nominal Voltage**	额定电压范围 **Nominal Voltage Range**	电流 **Current**	转速 **Speed**	输入功率 **Max. input Power**
Type			VDC	VDC	A	RPM	W
FB3G190-24PY-70	BLDC72	Ⓐ	24	16~28	2.4	2950	57
FB3G190-48PY-70	BLDC72	Ⓐ	48	36~57	1.2	2950	57
FB3G190-24PY-71	BLDC72	Ⓑ	24	16~28	3.0	3300	72
FB3G190-48PY-71	BLDC72	Ⓑ	48	36~57	1.5	3300	72
FB3G190-48PY-90	BLDC92	Ⓒ	48	36~57	3.0	4000	144
FB3G190-85PS-90	BLDC92	Ⓓ	85	68~102	2.1	4300	175
FB3G190-110PS-90	BLDC92	Ⓓ	110	88~132	1.6	4300	175

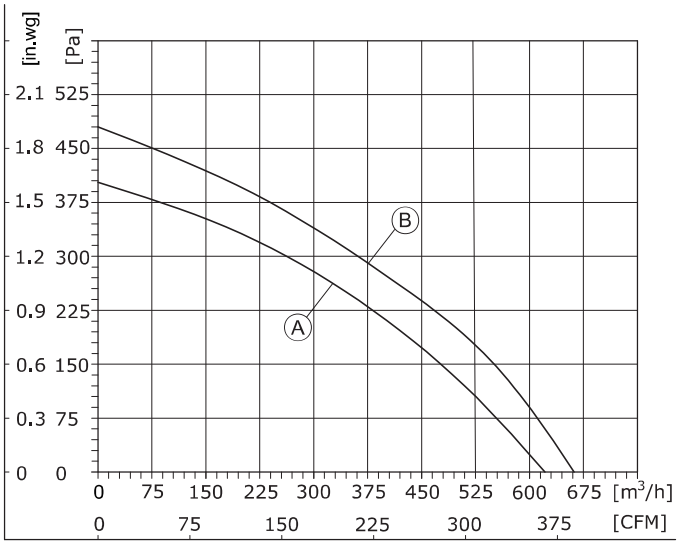

1、Air performance measured according to: ISO 5801, with DJ inlet ring without contact protection.
2、Intake-side sound level: LpA measured at 1 m distance from fan axis. The values given are only applicable under the specifi ed measuring conditions and may differ depending on the installation conditions.

DC Backward Centrifugal Fans D190

– 旋转方向**Direction of rotation:** 正转，从转子方向Clockwise，viewed toward rotor
– 技术特性**Technical features:** 参见附图See connection diagram
– 泄漏电流**Touch curren:** < 3,5 mA
– 能效**Efficiency:** ErP2015
– 标准/证书**Valid For Approval/Standard**：CE,RoHS,ISO9001
环境温度**Perm. ambient temp.**：**.**-25℃~+60℃
– 安装**Mounting:** 免维护滚珠轴承Maintenance-free ball bearings

噪音等级 **Sound Pressure Level**	风量 **Air Flow**	风压 **Air Pressure**	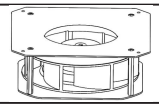	速度控制 **Speed Control**	接线图 **Wiring Mode**
dB(A)	m³/h	Pa	with support bracket		
68	621	403	FK3G190-24PY-70	0-10VDC PWM Modbus485	S1
68	621	403	FK3G190-48PY-70		S1
70	665	480	FK3G190-24PY-71		S1
70	665	480	FK3G190-48PY-71		S1
72	780	798	FK3G190-48PY-90		S2
73	903	782	FK3G190-85PS-90		S2
73	903	782	FK3G190-110PS-90		S2

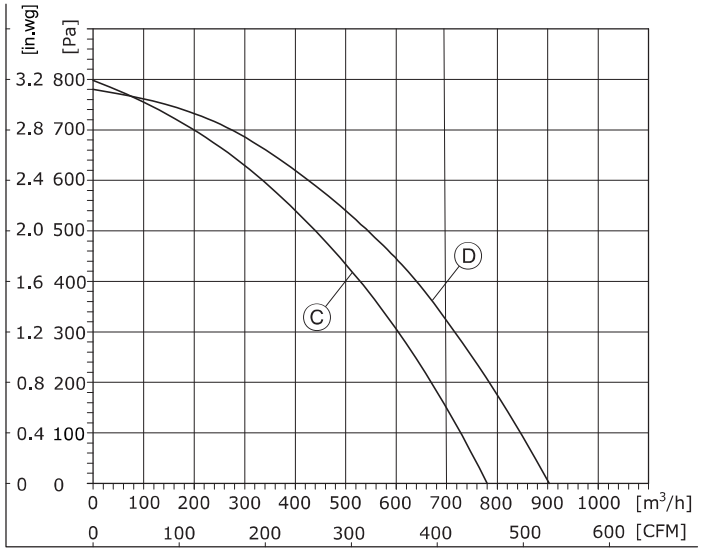

1、Air performance measured according to: ISO 5801, with DJ inlet ring without contact protection.
2、Intake-side sound level: LpA measured at 1 m distance from fan axis. The values given are only applicable under the specifi ed measuring conditions and may differ depending on the installation conditions.

(后向离心风机Centrifugal Fan)
FB3G190-24PY-70/FB3G190-48PY-70

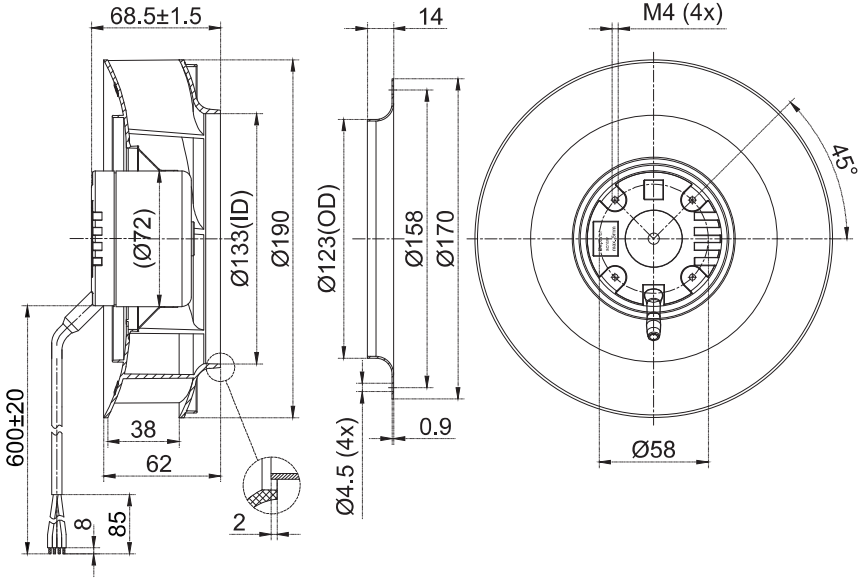

(后向离心风机Centrifugal Fan)
FB3G190-24PY-71/FB3G190-48PY-71

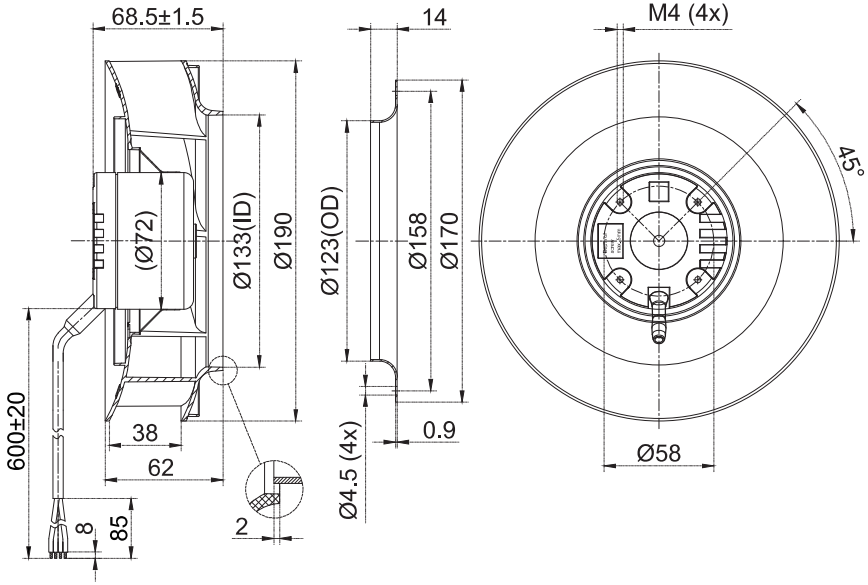

(支架离心风机Centrifugal Fan With Support Bracket)
FK3G190-24PY-70/FK3G190-48PY-70

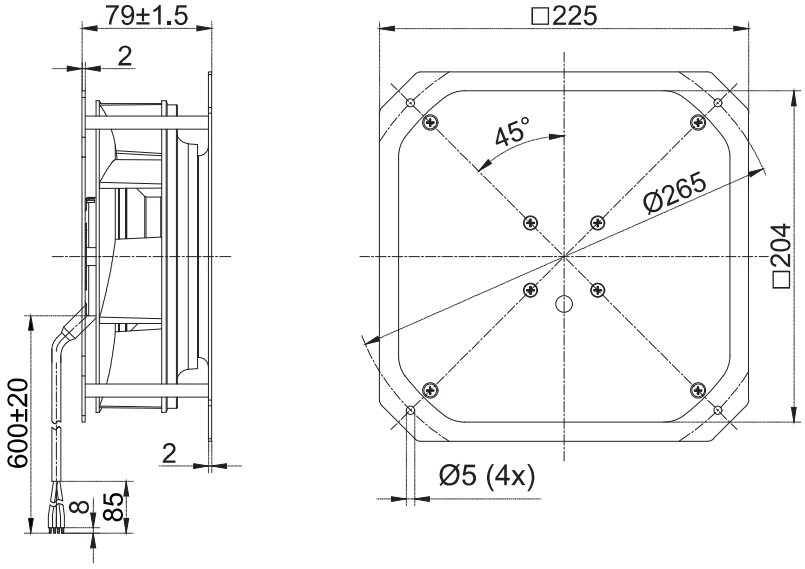

(支架离心风机Centrifugal Fan With Support Bracket)
FK3G190-24PY-71/FK3G190-48PY-71

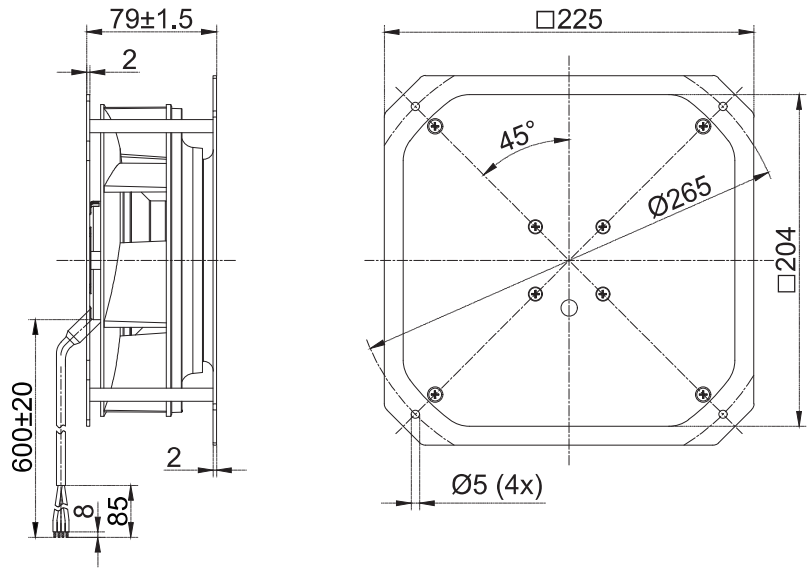

(后向离心风机Centrifugal Fan)
FB3G190-48PY-90

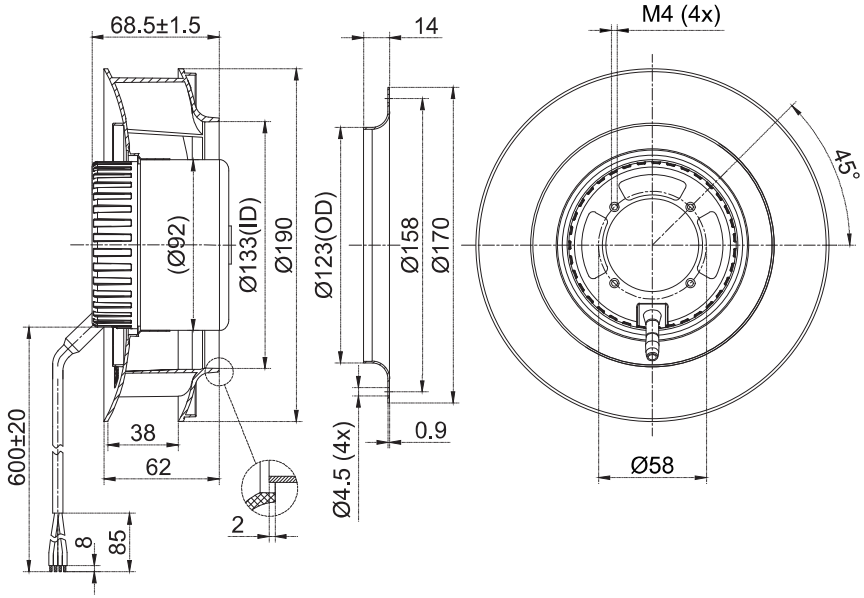

(后向离心风机Centrifugal Fan)
FB3G190-85PS-90

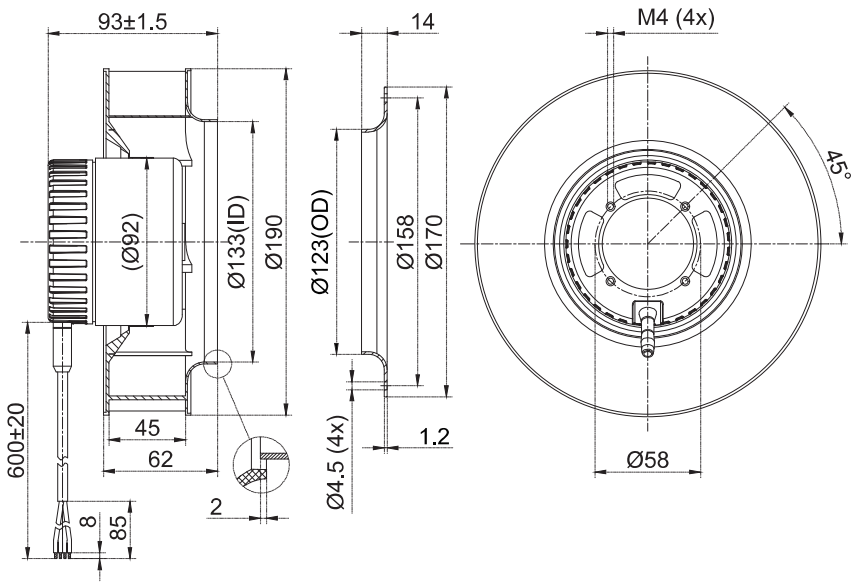

(支架离心风机Centrifugal Fan With Support Bracket)
FK3G190-48PY-90

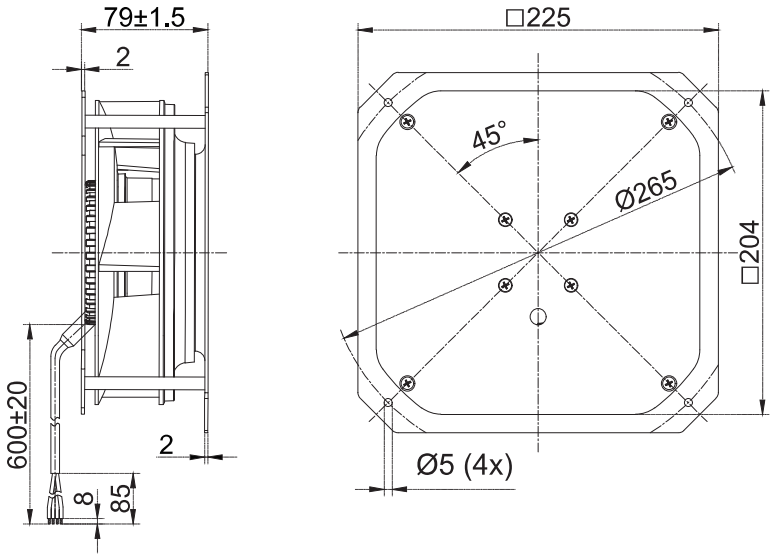

(支架离心风机Centrifugal Fan With Support Bracket)
FK3G190-85PS-90

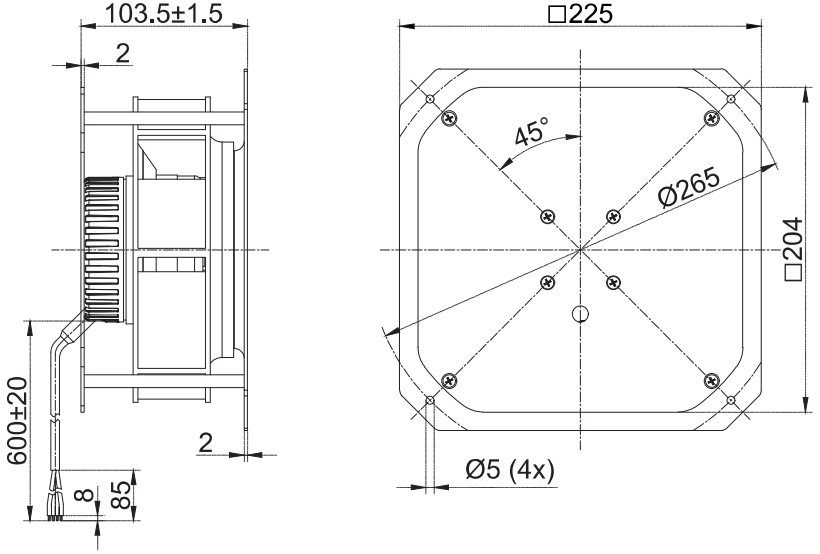

(后向离心风机Centrifugal Fan)
FB3G190-110PS-90

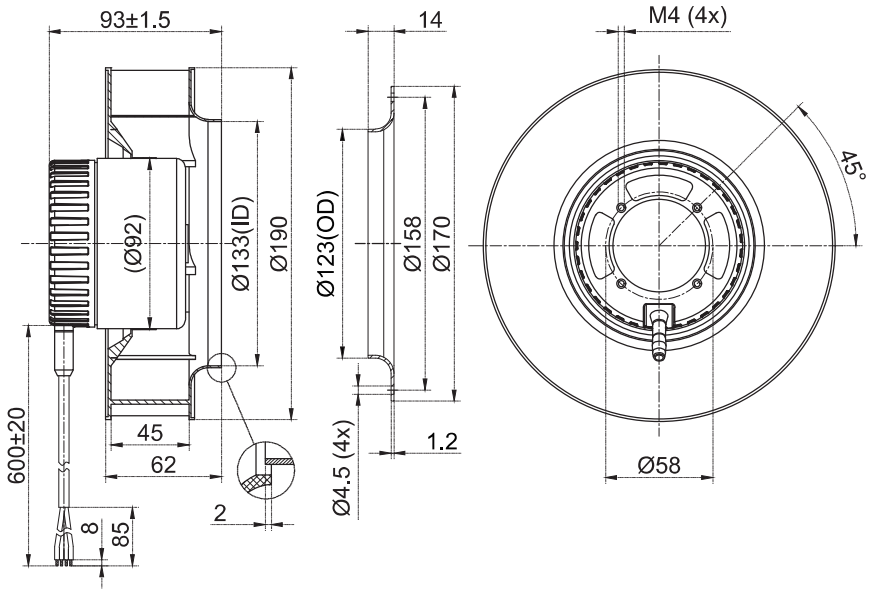

(支架离心风机Centrifugal Fan With Support Bracket)
FK3G190-110PS-90

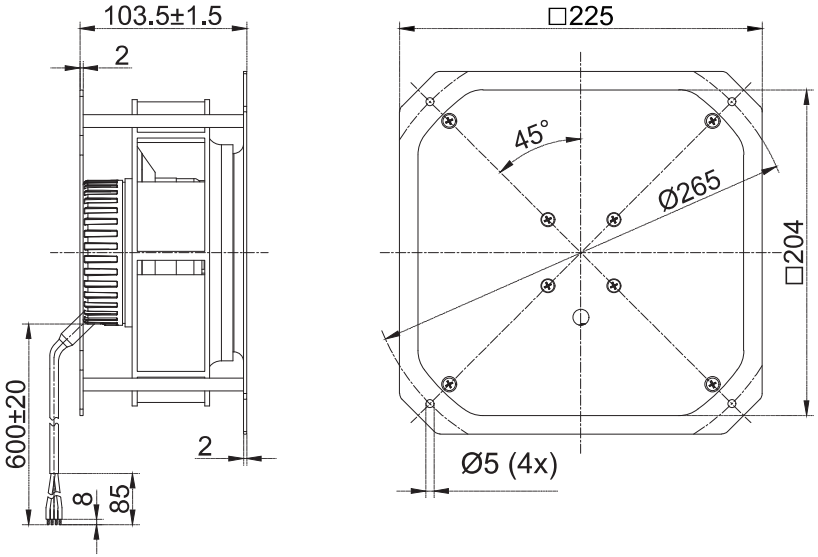



DC Backward Centrifugal Fans D220

– 材料**Material:** 塑料风轮Impeller: Plastic
转子 Rotor: 电泳Electrophoresis
端盖 Electronics housing: 压铸铝Die-cast aluminium
– 叶片数量**Number of blades:** 7
– 防护等级**Degree of protection:** IP 44
– 绝缘等级**Insulation class:** B
– 安装位置**Installation position:** 任意Any
– 模式**Mode:**连续工作制 Continuous operation (S1)

	电机 **Motor**	曲线 **Curve**	额定电压 **Nominal Voltage**	额定电压范围 **Nominal Voltage Range**	电流 **Current**	转速 **Speed**	输入功率 **Max. input Power**
Type			VDC	VDC	A	RPM	W
FB3G220-24PY-90	BLDC92	Ⓐ	24	16~28	4.8	3150	116
FB3G220-48PY-90	BLDC92	Ⓐ	48	36~57	2.4	3150	116
FB3G220-85PY-90	BLDC92	Ⓑ	85	68~102	2.1	3550	175
FB3G220-110PY-90	BLDC92	Ⓑ	110	88~132	1.6	3550	175

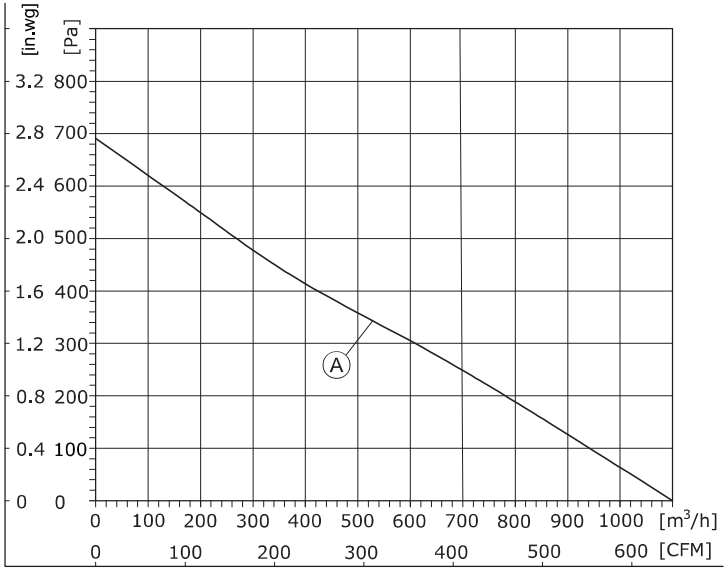

1、Air performance measured according to: ISO 5801, with DJ inlet ring without contact protection.
2、Intake-side sound level: LpA measured at 1 m distance from fan axis. The values given are only applicable under the specifi ed measuring conditions and may differ depending on the installation conditions.

DC Backward Centrifugal Fans D220

– 旋转方向**Direction of rotation:** 正转，从转子方向Clockwise，viewed toward rotor
– 技术特性**Technical features:** 参见附图See connection diagram
– 泄漏电流**Touch curren:** < 3,5 mA
– 能效**Efficiency:** ErP2015
– 标准/证书**Valid For Approval/Standard**：CE,RoHS,ISO9001
环境温度**Perm. ambient temp.**：**.**-25℃~+60℃
– 安装**Mounting:** 免维护滚珠轴承Maintenance-free ball bearings

噪音等级 **Sound Pressure Level**	风量 **Air Flow**	风压 **Air Pressure**	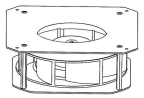	速度控制 **Speed Control**	接线图 **Wiring Mode**
dB(A)	m³/h	Pa	with support bracket		
72	1100	689	FK3G220-24PY-90	0-10VDC PWM Modbus485	S2
72	1100	689	FK3G220-48PY-90		S2
76	1100	820	FK3G220-85PY-90		S2
76	1100	820	FK3G220-110PY-90		S2

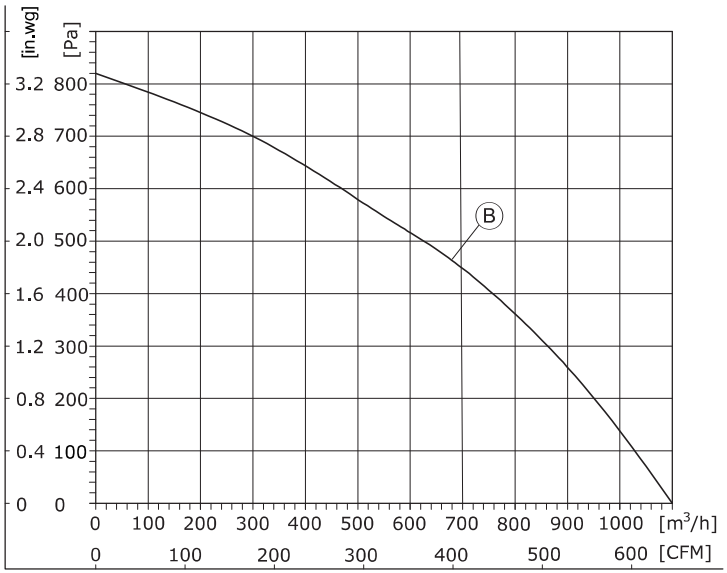

1、Air performance measured according to: ISO 5801, with DJ inlet ring without contact protection.
2、Intake-side sound level: LpA measured at 1 m distance from fan axis. The values given are only applicable under the specifi ed measuring conditions and may differ depending on the installation conditions.

(后向离心风机Centrifugal Fan)
FB3G220-24PY-90/FB3G220-48PY-90

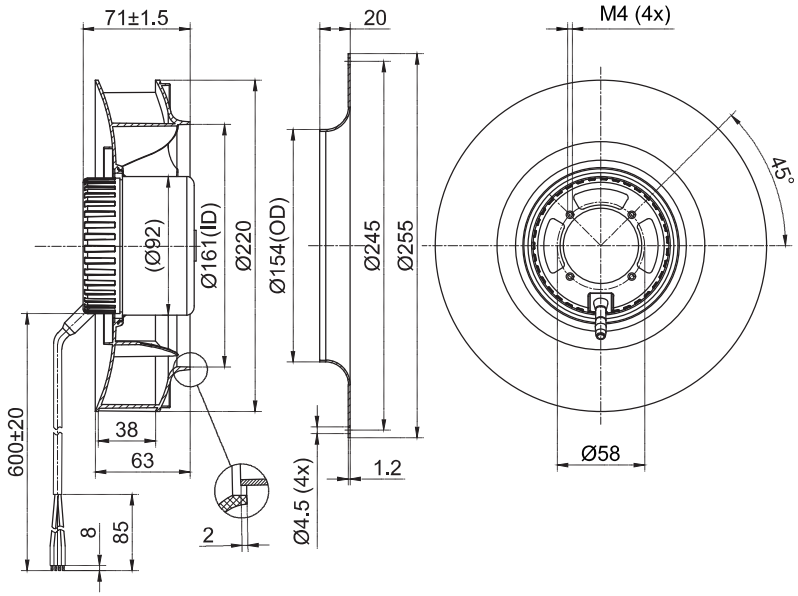

(后向离心风机Centrifugal Fan)
FB3G220-85PY-90/FB3G220-110PY-90

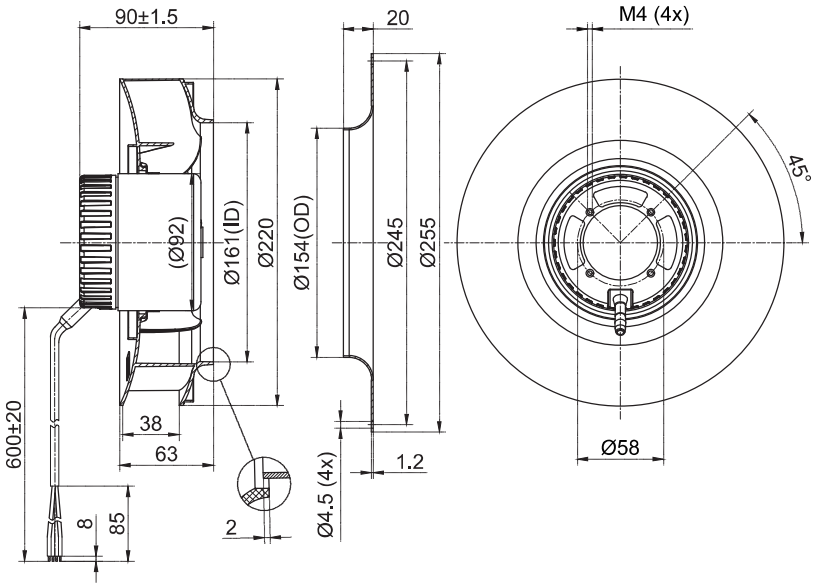

(支架离心风机Centrifugal Fan With Support Bracket)
FK3G220-24PY-90/FK3G220-48PY-90

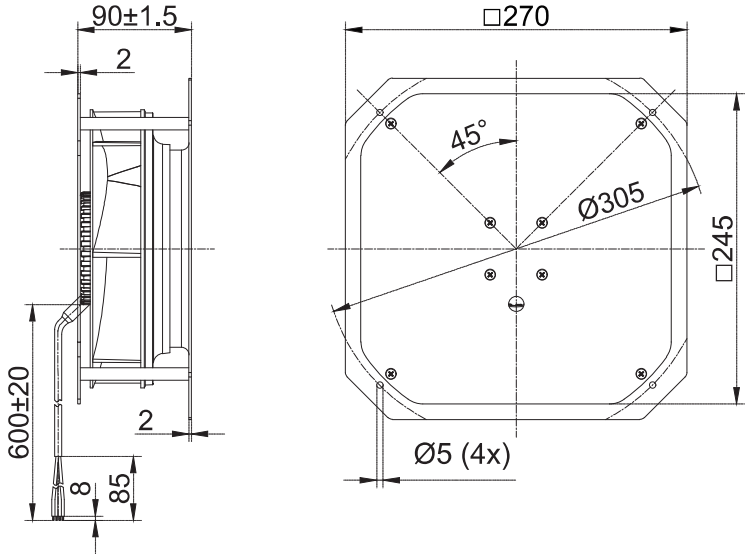

(支架离心风机Centrifugal Fan With Support Bracket)
FK3G220-85PY-90/FK3G220-110PY-90

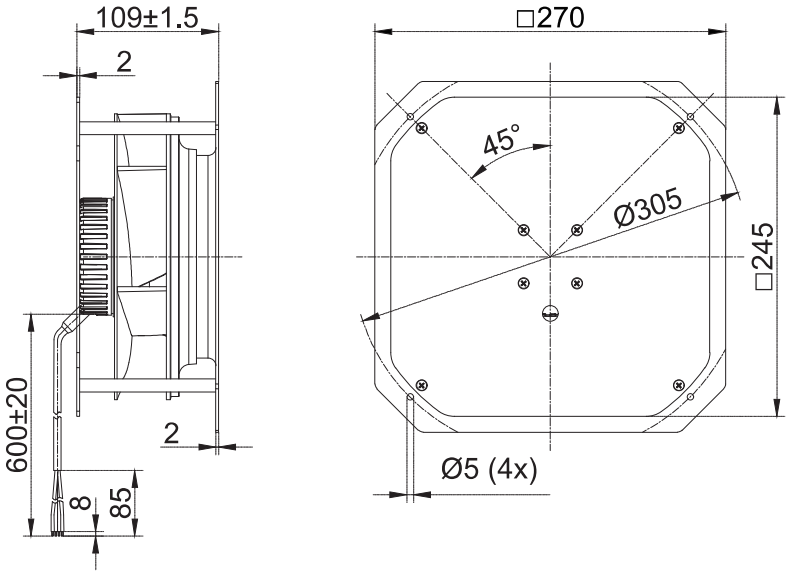



DC Backward Centrifugal Fans D225

– 材料**Material:** 塑料风轮Impeller: Plastic
转子 Rotor: 电泳Electrophoresis
端盖 Electronics housing: 压铸铝Die-cast aluminium
– 叶片数量**Number of blades:** 7
– 防护等级**Degree of protection:** IP 44
– 绝缘等级**Insulation class:** B
– 安装位置**Installation position:** 任意Any
– 模式**Mode:**连续工作制 Continuous operation (S1)

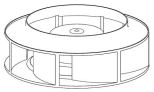	电机 **Motor**	曲线 **Curve**	额定电压 **Nominal Voltage**	额定电压范围 **Nominal Voltage Range**	电流 **Current**	转速 **Speed**	输入功率 **Max. input Power**
Type			VDC	VDC	A	RPM	W
FB3G225-24PY-70	BLDC72	Ⓐ	24	16~28	4.8	2300	115
FB3G225-48PY-70	BLDC72	Ⓐ	48	36~57	2.4	2300	115
FB3G225-24PY-90	BLDC92	Ⓑ	24	16~28	6.0	2700	144
FB3G225-48PY-90	BLDC92	Ⓑ	48	36~57	3.0	2700	144
FB3G225-85PY-90	BLDC92	Ⓑ	85	68~102	1.7	2700	144
FB3G225-110PY-90	BLDC92	Ⓑ	110	77~138	1.3	2700	144

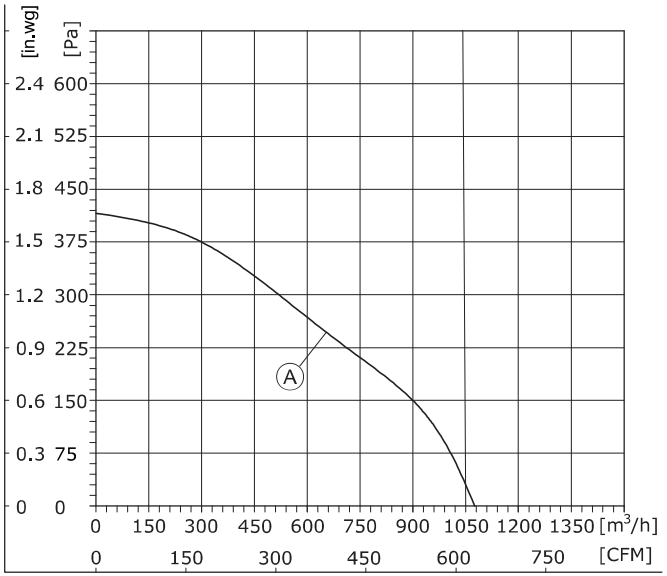

1、Air performance measured according to: ISO 5801, with DJ inlet ring without contact protection.
2、Intake-side sound level: LpA measured at 1 m distance from fan axis. The values given are only applicable under the specifi ed measuring conditions and may differ depending on the installation conditions.

DC Backward Centrifugal Fans D225

– 旋转方向**Direction of rotation:** 正转，从转子方向Clockwise，viewed toward rotor
– 技术特性**Technical features:** 参见附图See connection diagram
– 泄漏电流**Touch curren:** < 3,5 mA
– 能效**Efficiency:** ErP2015
– 标准/证书**Valid For Approval/Standard**：CE,RoHS,ISO9001
环境温度**Perm. ambient temp.**：**.**-25℃~+60℃
– 安装**Mounting:** 免维护滚珠轴承Maintenance-free ball bearings

噪音等级 **Sound Pressure Level**	风量 **Air Flow**	风压 **Air Pressure**	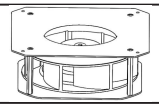	速度控制 **Speed Control**	接线图 **Wiring Mode**
dB(A)	m³/h	Pa	with support bracket		
67	1074	412	FK3G225-24PY-70	0-10VDC PWM Modbus485	S1
67	1074	412	FK3G225-48PY-70		S1
68.3	1202	514	FK3G225-24PY-90		S2
68.3	1202	514	FK3G225-48PY-90		S2
68.3	1202	514	FK3G225-85PY-90		S2
68.3	1202	514	FK3G225-110PY-90		S2

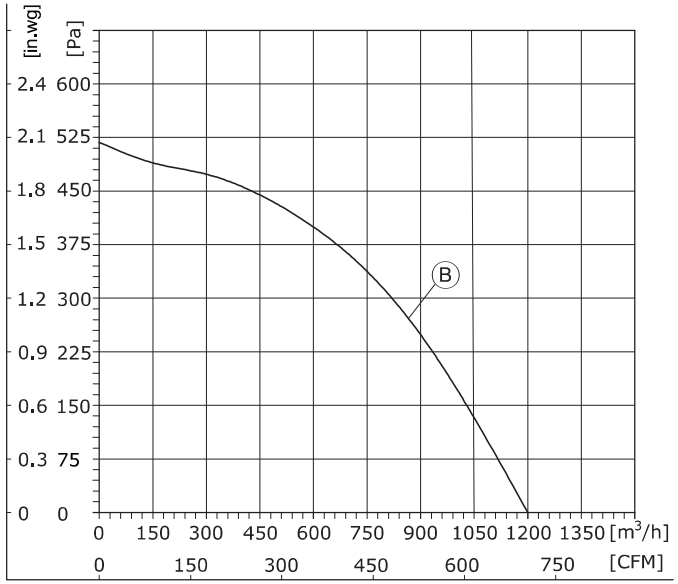

1、Air performance measured according to: ISO 5801, with DJ inlet ring without contact protection.
2、Intake-side sound level: LpA measured at 1 m distance from fan axis. The values given are only applicable under the specifi ed measuring conditions and may differ depending on the installation conditions.

(后向离心风机Centrifugal Fan)
FB3G225-24PY-70/FB3G225-48PY-70

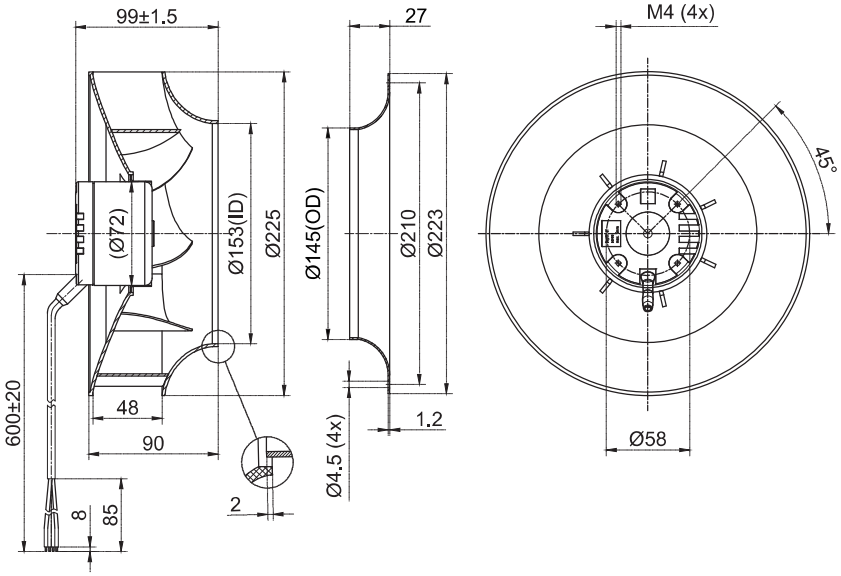

(后向离心风机Centrifugal Fan)
FB3G225-24PY-90/FB3G225-48PY-90/FB3G225-85PY-90/FB3G225-110PY-90

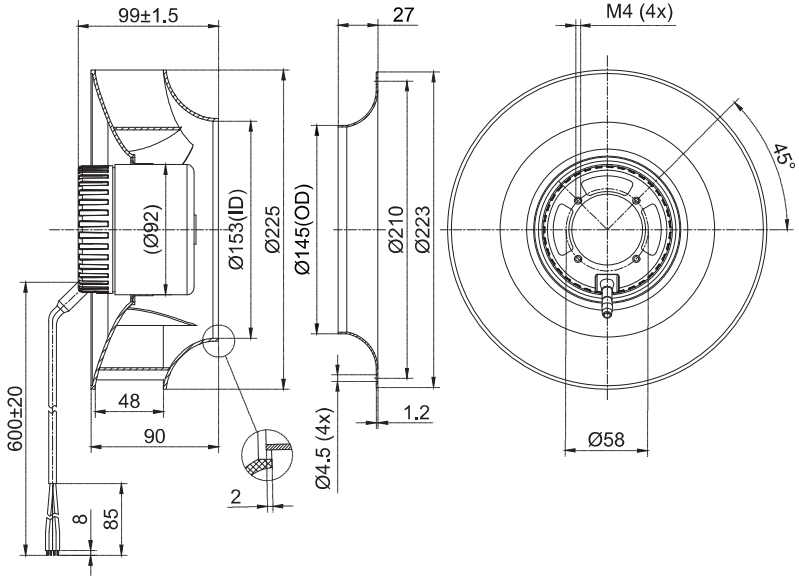

(支架离心风机Centrifugal Fan With Support Bracket)
FK3G225-24PY-70/FK3G225-48PY-70

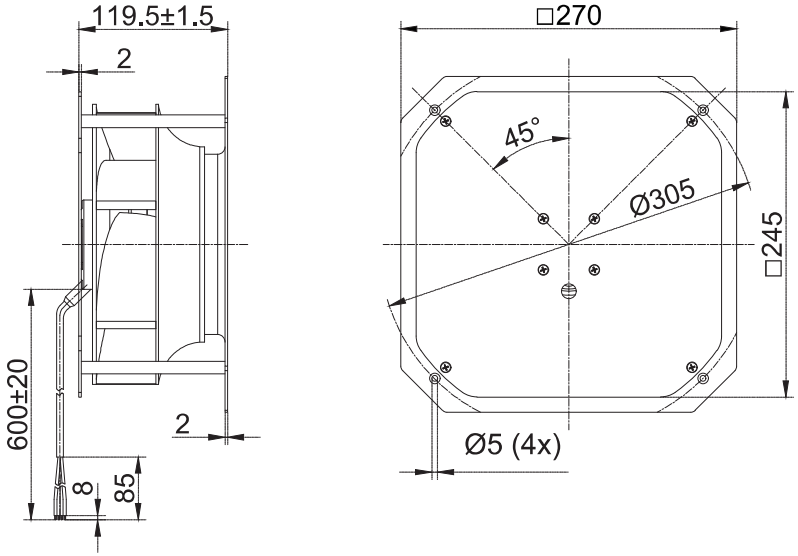

(支架离心风机Centrifugal Fan With Support Bracket)
FK3G225-24PY-90/FK3G225-48PY-90/FK3G225-85PY-90/FK3G225-110PY-90

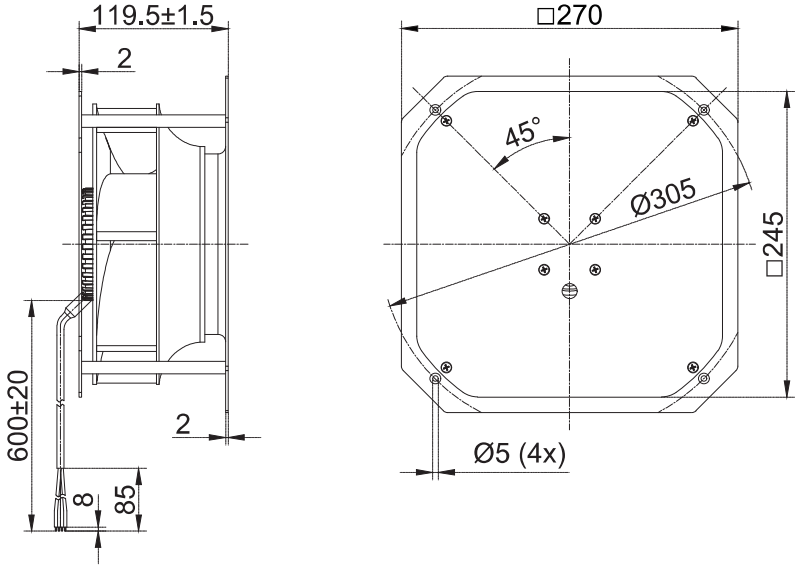



DC Backward Centrifugal Fans D250

– 材料**Material:** 塑料风轮Impeller: Plastic
转子 Rotor: 电泳Electrophoresis
端盖 Electronics housing: 压铸铝Die-cast aluminium
– 叶片数量**Number of blades:** 7
– 防护等级**Degree of protection:** IP 44
– 绝缘等级**Insulation class:** B
– 安装位置**Installation position:** 任意Any
– 模式**Mode:**连续工作制 Continuous operation (S1)

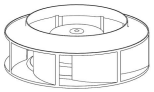	电机 **Motor**	曲线 **Curve**	额定电压 **Nominal Voltage**	额定电压范围 **Nominal Voltage Range**	电流 **Current**	转速 **Speed**	输入功率 **Max. input Power**
Type			VDC	VDC	A	RPM	W
FB3G250-24PL-90	BLDC92	Ⓐ	24	16~28	3.5	2150	85
FB3G250-48PL-90	BLDC92	Ⓐ	48	36~57	1.75	2150	85
FB3G250-24PL-91	BLDC92	Ⓑ	24	16~28	8.0	2950	192
FB3G250-48PL-91	BLDC92	Ⓑ	48	36~57	4.0	2950	192
FB3G250-48PL-20	BLDC102	Ⓒ	48	36~57	8.75	3720	420
FB3G250-85PL-20	BLDC102	Ⓒ	85	68~102	5.0	3720	420
FB3G250-110PL-20	BLDC102	Ⓒ	110	77~138	3.82	3720	420

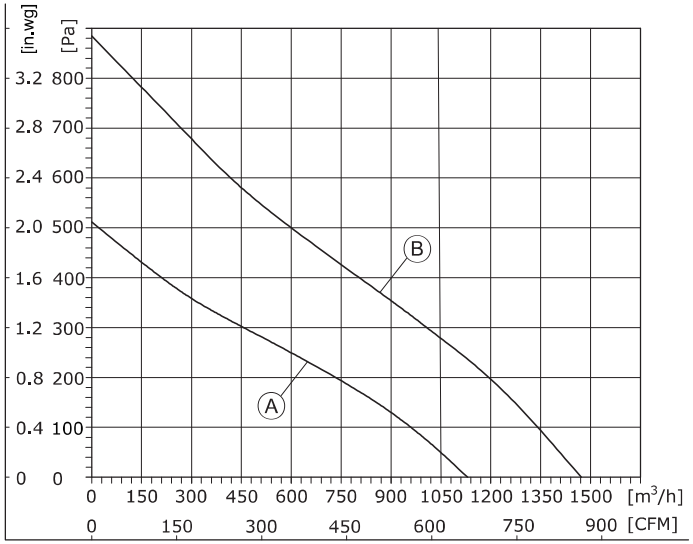

1、Air performance measured according to: ISO 5801, with DJ inlet ring without contact protection.
2、Intake-side sound level: LpA measured at 1 m distance from fan axis. The values given are only applicable under the specifi ed measuring conditions and may differ depending on the installation conditions.

DC Backward Centrifugal Fans D250

– 旋转方向**Direction of rotation:** 正转，从转子方向Clockwise，viewed toward rotor
– 技术特性**Technical features:** 参见附图See connection diagram
– 泄漏电流**Touch curren:** < 3,5 mA
– 能效**Efficiency:** ErP2015
– 标准/证书**Valid For Approval/Standard**：CE,RoHS,ISO9001
环境温度**Perm. ambient temp.**：**.**-25℃~+60℃
– 安装**Mounting:** 免维护滚珠轴承Maintenance-free ball bearings

噪音等级 **Sound Pressure Level**	风量 **Air Flow**	风压 **Air Pressure**	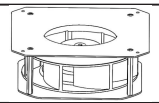	速度控制 **Speed Control**	接线图 **Wiring Mode**
dB(A)	m³/h	Pa	with support bracket		
66	1132	508	FK3G250-24PL-90	0-10VDC PWM Modbus485	S2
66	1132	508	FK3G250-48PL-90		S2
71	1475	885	FK3G250-24PL-91		S2
71	1475	885	FK3G250-48PL-91		S2
83.3	1941	1248	FK3G250-48PL-20		S3
83.3	1941	1248	FK3G250-85PL-20		S3
83.3	1941	1248	FK3G250-110PL-20		S3

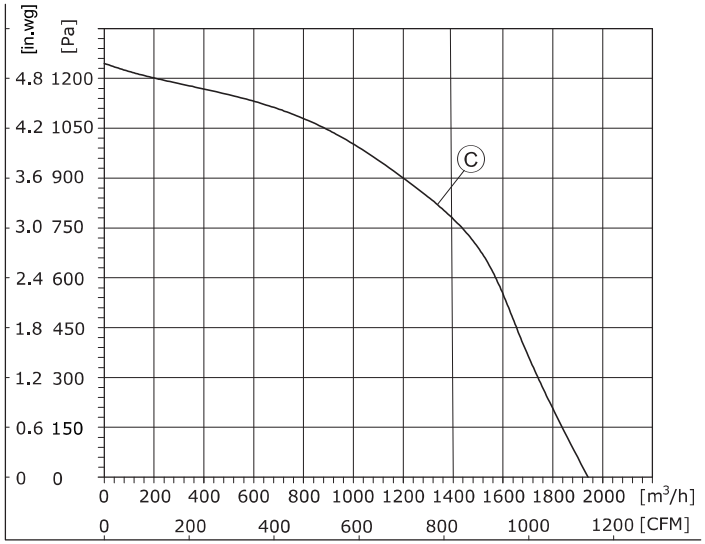

1、Air performance measured according to: ISO 5801, with DJ inlet ring without contact protection.
2、Intake-side sound level: LpA measured at 1 m distance from fan axis. The values given are only applicable under the specifi ed measuring conditions and may differ depending on the installation conditions.

(后向离心风机Centrifugal Fan)
FB3G250-24PL-90/FB3G250-48PL-90

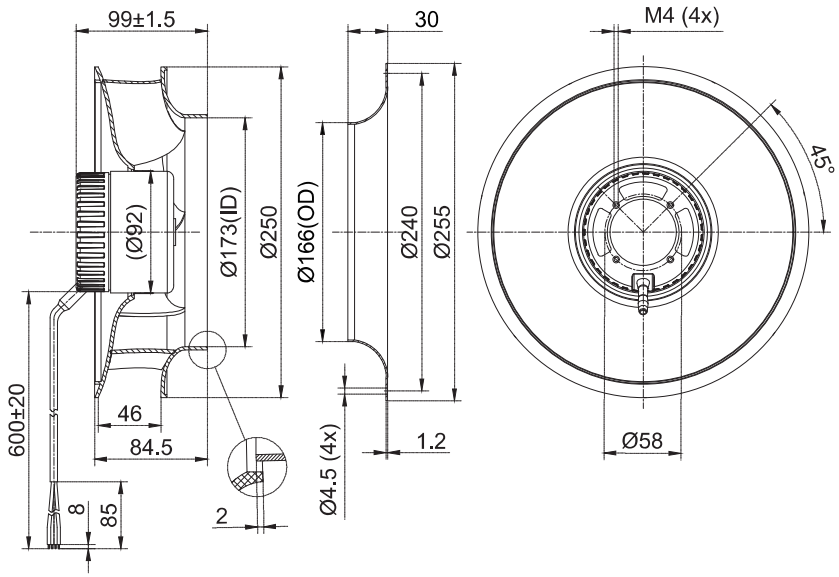

(后向离心风机Centrifugal Fan)
FB3G250-24PL-91/FB3G250-48PL-91

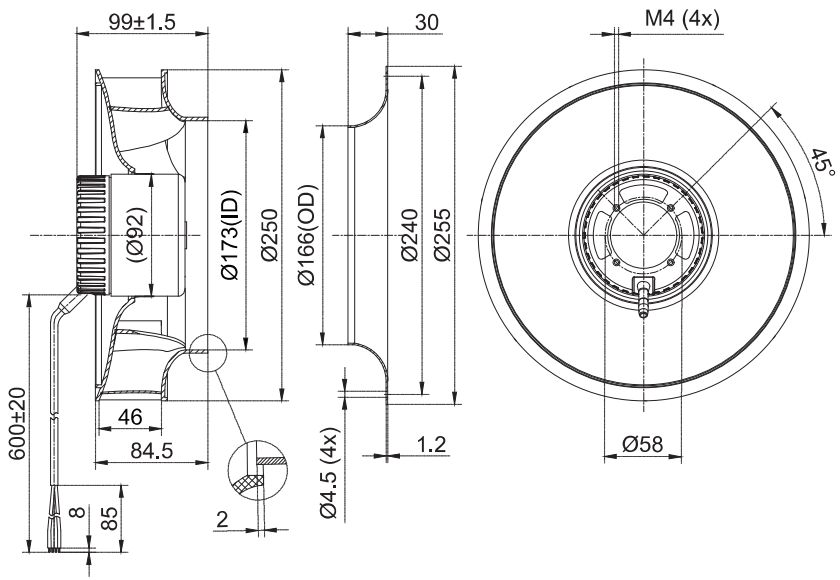

(支架离心风机Centrifugal Fan With Support Bracket)
FK3G250-24PL-90/FK3G250-48PL-90

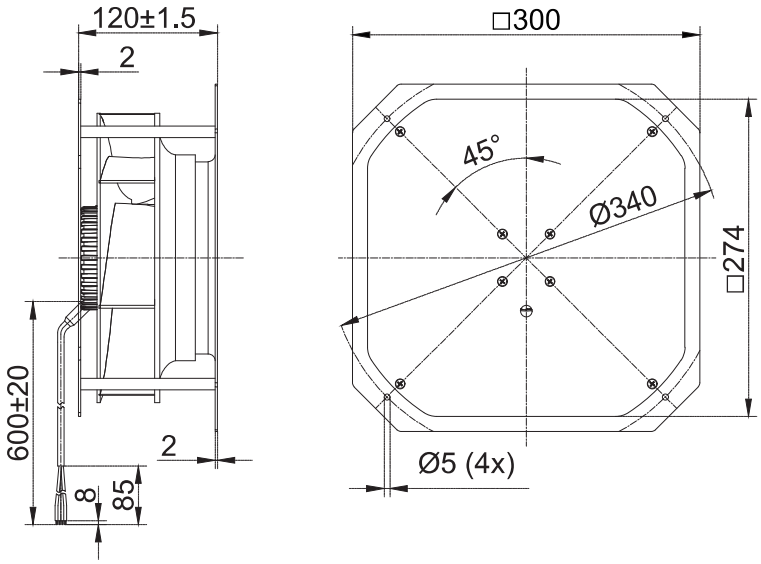

(支架离心风机Centrifugal Fan With Support Bracket)
FK3G250-24PL-91/FK3G250-48PL-91

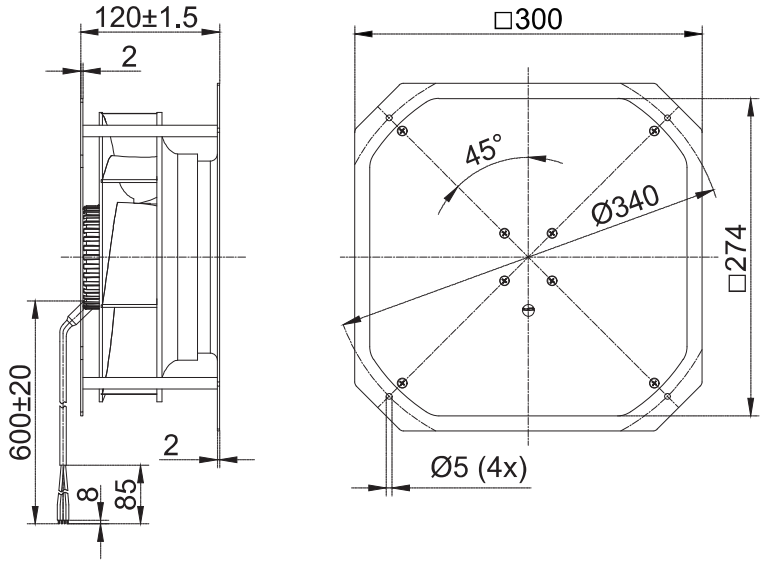

(后向离心风机Centrifugal Fan)
FB3G250-48PL-20/FB3G250-85PL-20/FB3G250-110PL-20

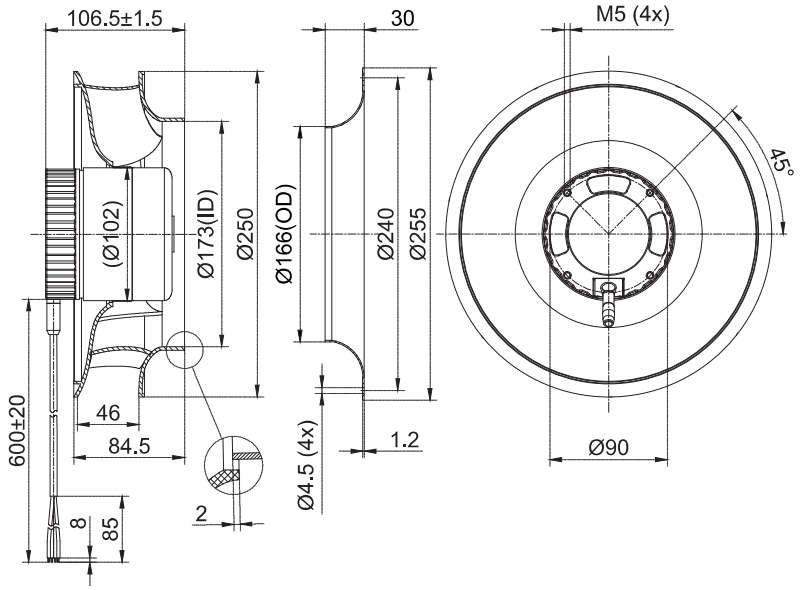

(支架离心风机Centrifugal Fan With Support Bracket)
FK3G250-48PL-20/FK3G250-85PL-20/FK3G250-110PL-20

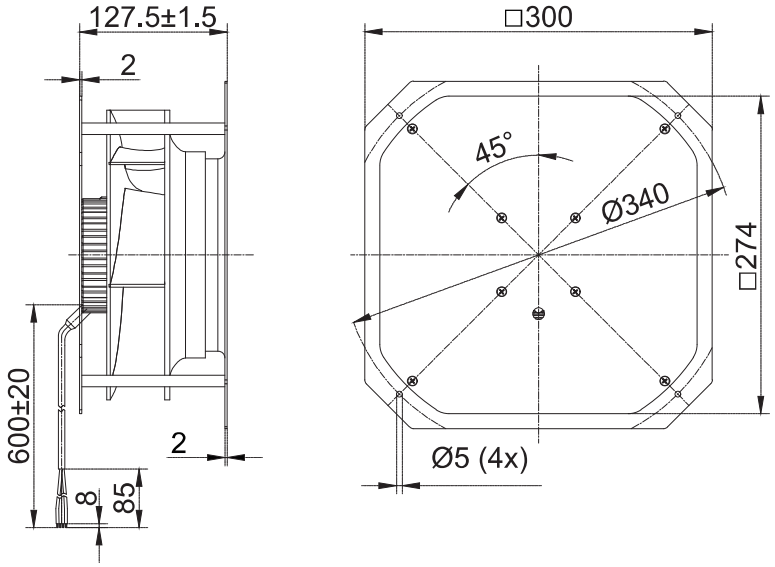



DC Backward Centrifugal Fans D280

– 材料**Material:** 塑料风轮Impeller: Plastic
转子 Rotor: 电泳Electrophoresis
端盖 Electronics housing: 压铸铝Die-cast aluminium
– 叶片数量**Number of blades:** 6
– 防护等级**Degree of protection:** IP 44
– 绝缘等级**Insulation class:** B
– 安装位置**Installation position:** 任意Any
– 模式**Mode:**连续工作制 Continuous operation (S1)

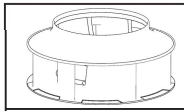	电机 **Motor**	曲线 **Curve**	额定电压 **Nominal Voltage**	额定电压范围 **Nominal Voltage Range**	电流 **Current**	转速 **Speed**	输入功率 **Max. input Power**
Type			VDC	VDC	A	RPM	W
FB3G280-24PL-90	BLDC92	Ⓐ	24	16~28	7.1	1900	170
FB3G280-48PL-90	BLDC92	Ⓐ	48	36~57	3.55	1900	170
FB3G280-48PL-20	BLDC102	Ⓑ	48	36~57	8.2	2610	395
FB3G280-85PL-20	BLDC102	Ⓑ	85	68~102	4.65	2610	395
FB3G280-110PL-20	BLDC102	Ⓑ	110	77~138	3.6	2610	395

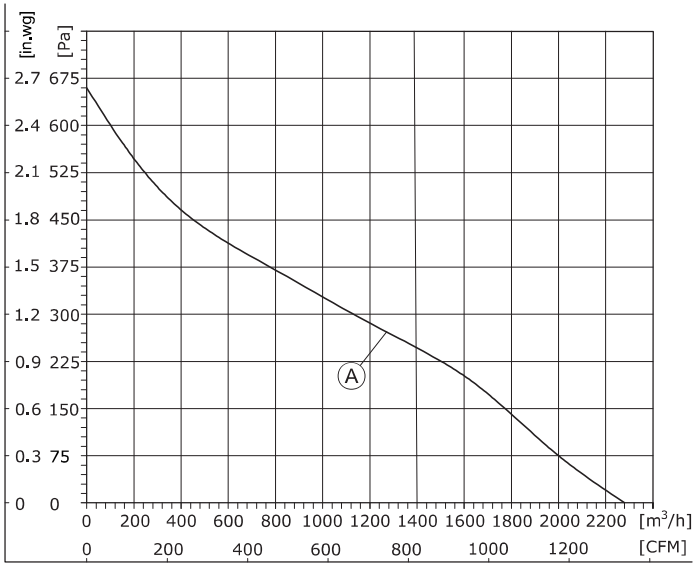

1、Air performance measured according to: ISO 5801, with DJ inlet ring without contact protection.
2、Intake-side sound level: LpA measured at 1 m distance from fan axis. The values given are only applicable under the specifi ed measuring conditions and may differ depending on the installation conditions.

DC Backward Centrifugal Fans D280

– 旋转方向**Direction of rotation:** 正转，从转子方向Clockwise，viewed toward rotor
– 技术特性**Technical features:** 参见附图See connection diagram
– 泄漏电流**Touch curren:** < 3,5 mA
– 能效**Efficiency:** ErP2015
– 标准/证书**Valid For Approval/Standard**：CE,RoHS,ISO9001
环境温度**Perm. ambient temp.**：.-25℃~+60℃
– 安装**Mounting:** 免维护滚珠轴承Maintenance-free ball bearings

噪音等级 **Sound Pressure Level**	风量 **Air Flow**	风压 **Air Pressure**	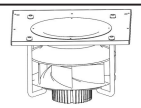	速度控制 **Speed Control**	接线图 **Wiring Mode**
dB(A)	m³/h	Pa	with support bracket		
69.9	2286	661	FK3G280-24PL-90	0-10VDC PWM Modbus485	S2
69.9	2286	661	FK3G280-48PL-90		S2
78	3084	777	FK3G280-48PL-20		S3
78	3084	777	FK3G280-85PL-20		S3
78	3084	777	FK3G280-110PL-20		S3

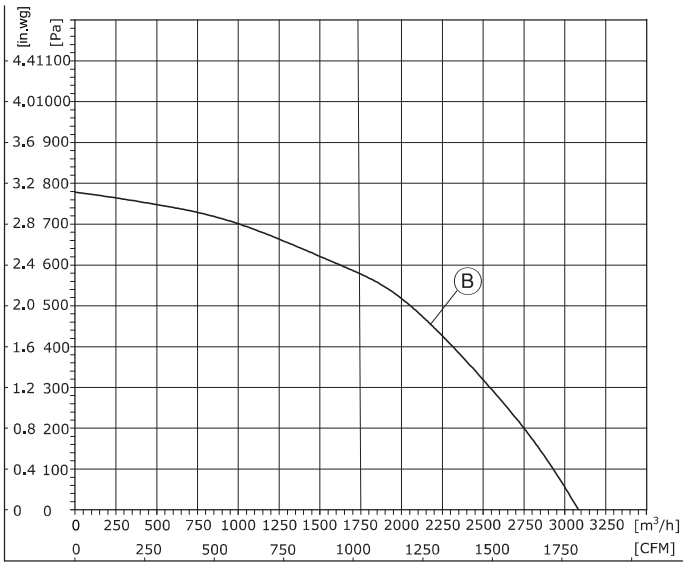

1、Air performance measured according to: ISO 5801, with DJ inlet ring without contact protection.
2、Intake-side sound level: LpA measured at 1 m distance from fan axis. The values given are only applicable under the specifi ed measuring conditions and may differ depending on the installation conditions.

(后向离心风机Centrifugal Fan)
FB3G280-24PL-90/FB3G280-48PL-90

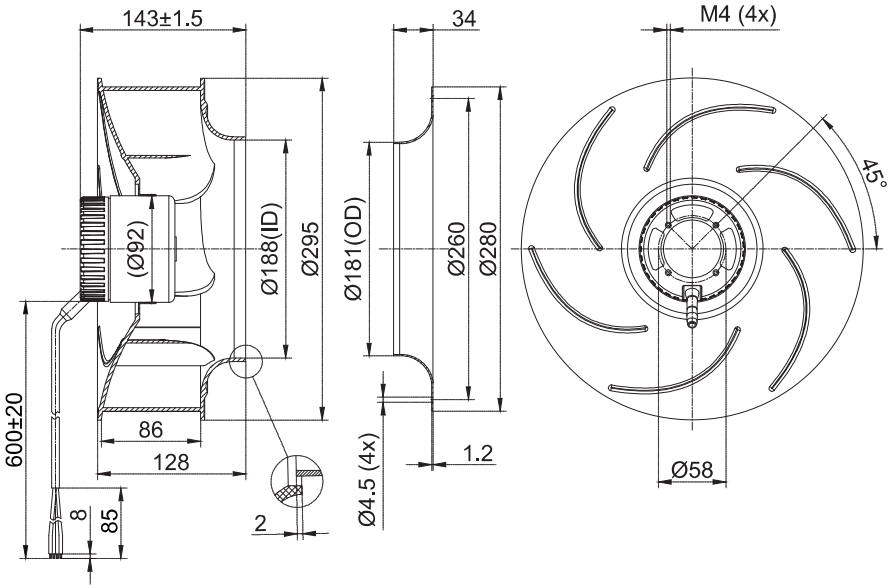

(后向离心风机Centrifugal Fan)
FB3G280-48PL-20/FB3G280-85PL-20/FB3G280-110PL-20

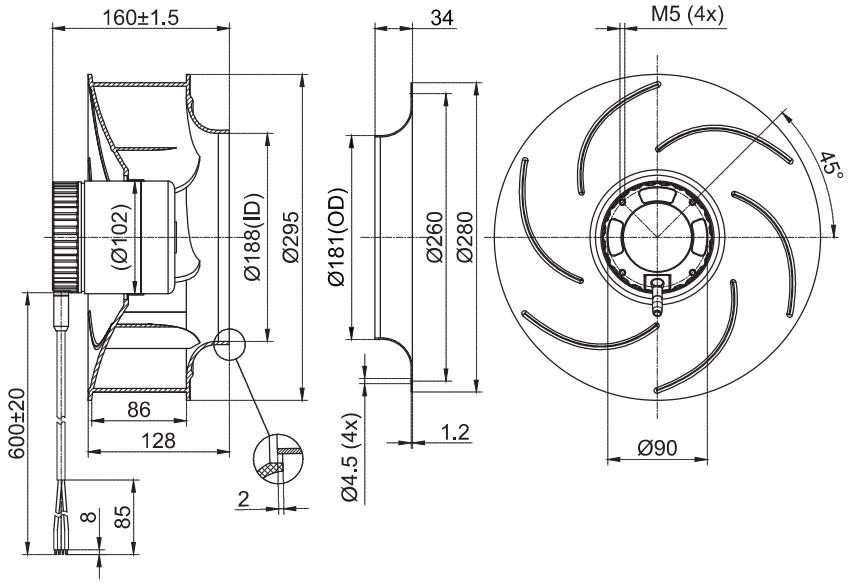

(支架离心风机Centrifugal Fan With Support Bracket)
FK3G280-24PL-90/FK3G280-48PL-90

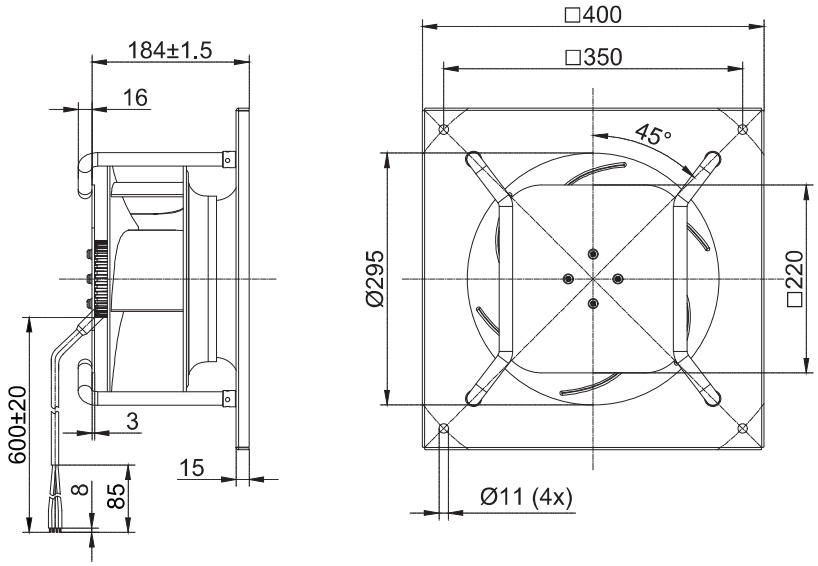

(支架离心风机Centrifugal Fan With Support Bracket)
FK3G280-48PL-20/FK3G280-85PL-20/FK3G280-110PL-20

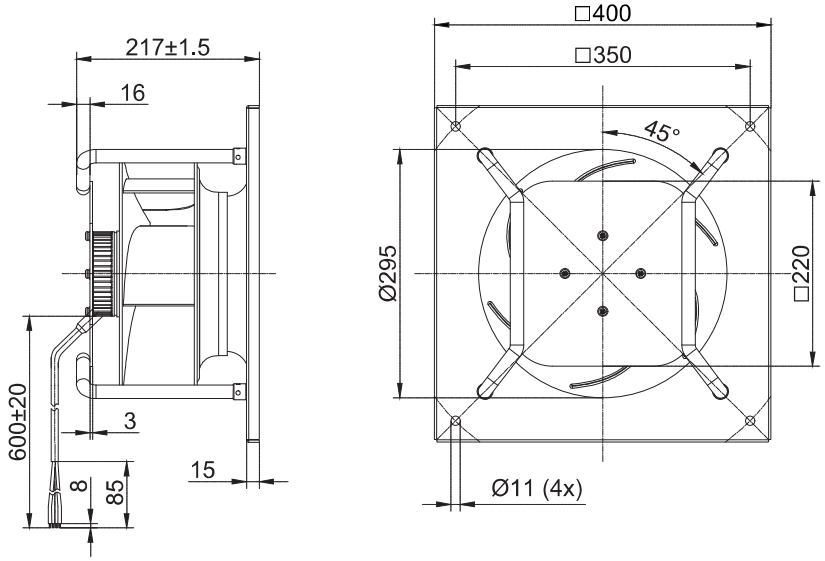



DC Backward Centrifugal Fans D310

– 材料**Material:** 塑料/铝合金 风轮Impeller: Plastic/Aluminium alloy
转子 Rotor: 电泳Electrophoresis
端盖 Electronics housing: 压铸铝Die-cast aluminium
– 叶片数量**Number of blades:** 6/7
– 防护等级**Degree of protection:** IP 44
– 绝缘等级**Insulation class:** B
– 安装位置**Installation position:** 任意Any
– 模式**Mode:**连续工作制 Continuous operation (S1)

DC Backward Centrifugal Fans D310

– 旋转方向**Direction of rotation:** 正转，从转子方向Clockwise，viewed toward rotor
– 技术特性**Technical features:** 参见附图See connection diagram
– 泄漏电流**Touch curren:** < 3,5 mA
– 能效**Efficiency:** ErP2015
– 标准/证书**Valid For Approval/Standard**：CE,RoHS,ISO9001
环境温度**Perm. ambient temp.**：**.**-25℃~+60℃
– 安装**Mounting:** 免维护滚珠轴承Maintenance-free ball bearings

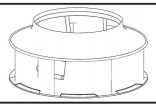	电机 **Motor**	曲线 **Curve**	额定电压 **Nominal Voltage**	额定电压范围 **Nominal Voltage Range**	电流 **Current**	转速 **Speed**	输入功率 **Max. input Power**
Type			VDC	VDC	A	RPM	W
FB3G310-24AL-90	BLDC92	Ⓐ	24	16~28	5.6	1720	135
FB3G310-48AL-90	BLDC92	Ⓐ	48	36~57	2.8	1720	135
FB3G310-24AY-90	BLDC92	Ⓑ	24	16~28	5.2	1600	125
FB3G310-48AY-90	BLDC92	Ⓑ	48	36~57	2.6	1600	125
FB3G310-48AL-21	BLDC102	Ⓒ	48	36~57	6.7	2550	321
FB3G310-48AY-20	BLDC102	Ⓓ	48	36~57	4.5	1930	216
FB3G310-48AY-21	BLDC102	Ⓔ	48	36~57	7.0	2200	336
FB3G310-48PK-20	BLDC102	Ⓕ	48	36~57	3.15	1520	150

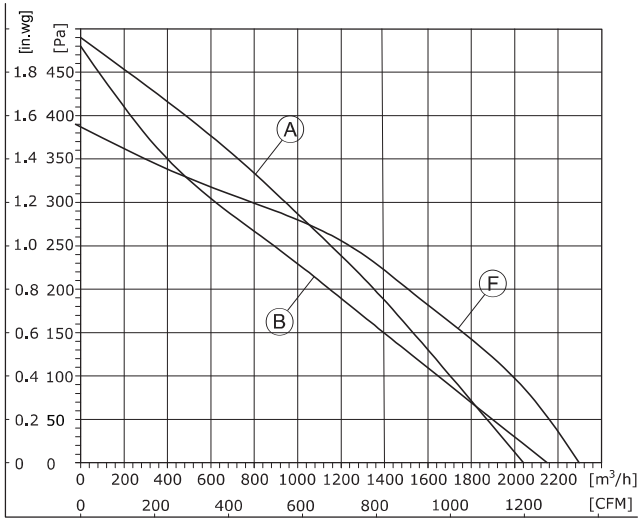

1、Air performance measured according to: ISO 5801, with DJ inlet ring without contact protection.
2、Intake-side sound level: LpA measured at 1 m distance from fan axis. The values given are only applicable under the specifi ed measuring conditions and may differ depending on the installation conditions.

噪音等级 **Sound Pressure Level**	风量 **Air Flow**	风压 **Air Pressure**	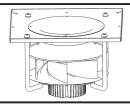	速度控制 **Speed Control**	接线图 **Wiring Mode**
dB(A)	m³/h	Pa	with support bracket		
67	2050	490	FK3G310-24AL-90	0-10VDC PWM Modbus485	S2
67	2050	490	FK3G310-48AL-90		S2
64	2150	480	FK3G310-24AY-90		S2
64	2150	480	FK3G310-48AY-90		S2
73	2750	865	FK3G310-48AL-21		S3
66	2616	550	FK3G310-48AY-20		S3
69	3020	665	FK3G310-48AY-21		S3
69	2320	390	FK3G310-48PK-20		S3

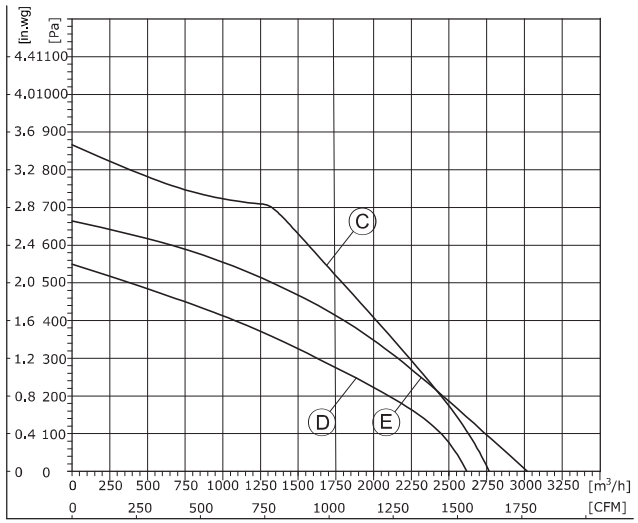

1、Air performance measured according to: ISO 5801, with DJ inlet ring without contact protection.
2、Intake-side sound level: LpA measured at 1 m distance from fan axis. The values given are only applicable under the specifi ed measuring conditions and may differ depending on the installation conditions.

DC Centrifugal Fan

(后向离心风机Centrifugal Fan)
FB3G310-24AL-90/FB3G310-48AL-90

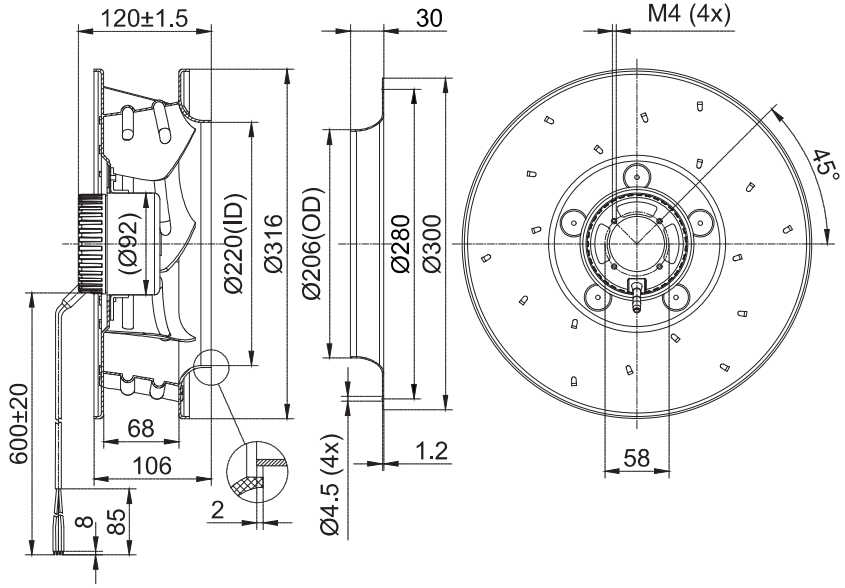

(后向离心风机Centrifugal Fan)
FB3G310-24AY-90/FB3G310-48AY-90

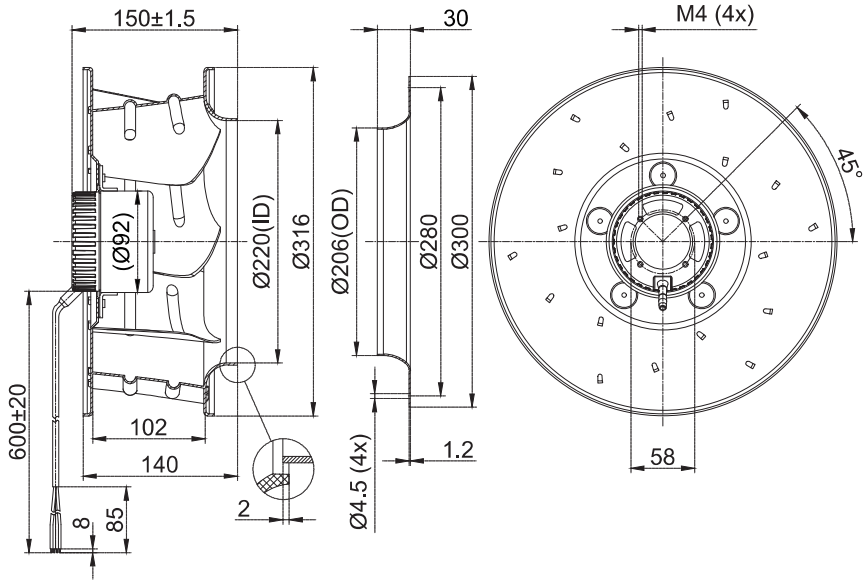

(支架离心风机Centrifugal Fan With Support Bracket)
FK3G310-24AL-90/FK3G310-48AL-90

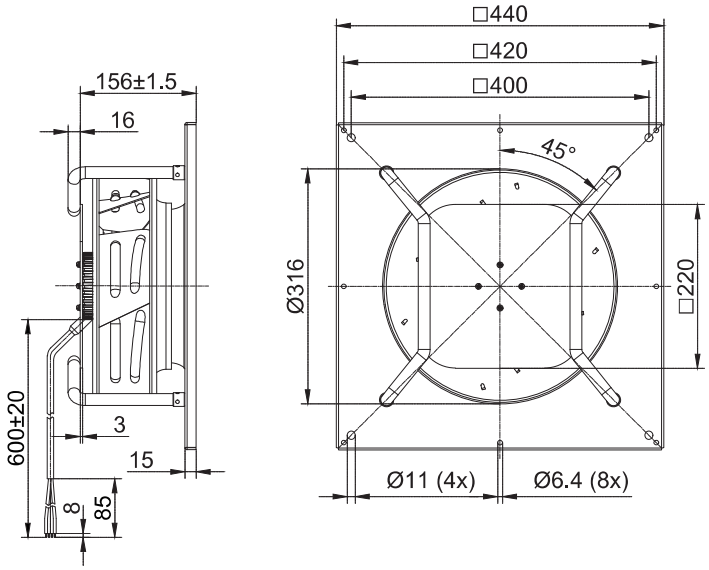

(支架离心风机Centrifugal Fan With Support Bracket)
FK3G310-24AY-90/FK3G310-48AY-90

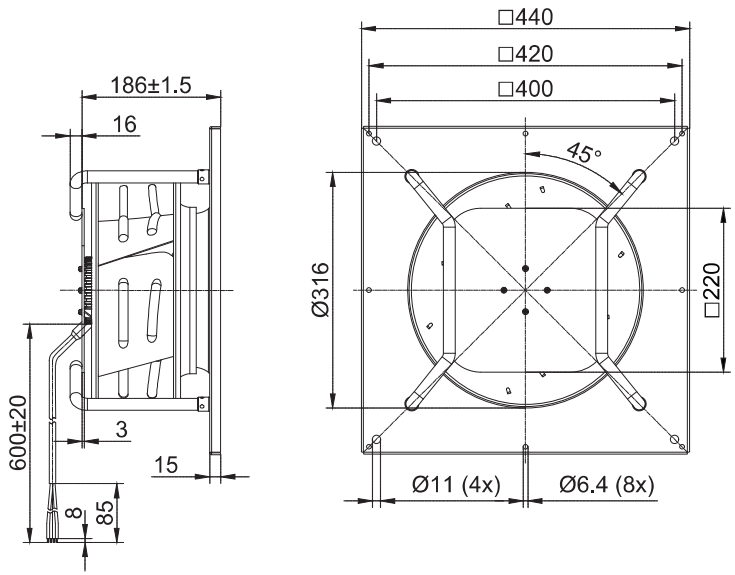

(后向离心风机Centrifugal Fan)
FB3G310-48AL-21

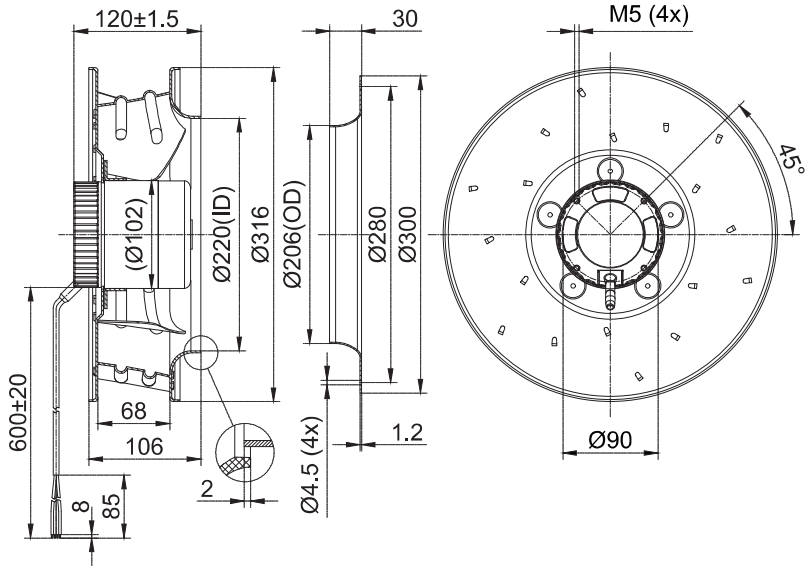

(后向离心风机Centrifugal Fan)
FB3G310-48AY-20

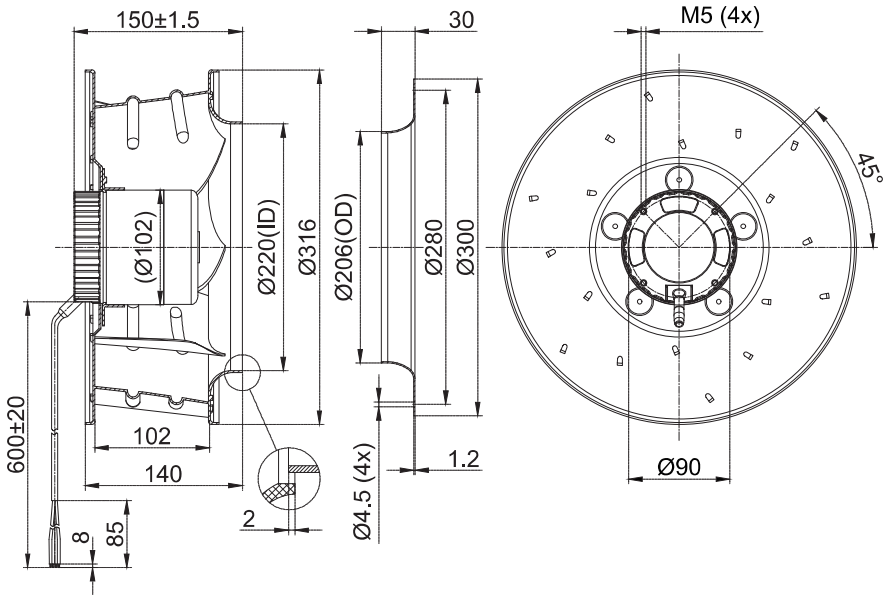

(支架离心风机Centrifugal Fan With Support Bracket)
FK3G310-48AL-21

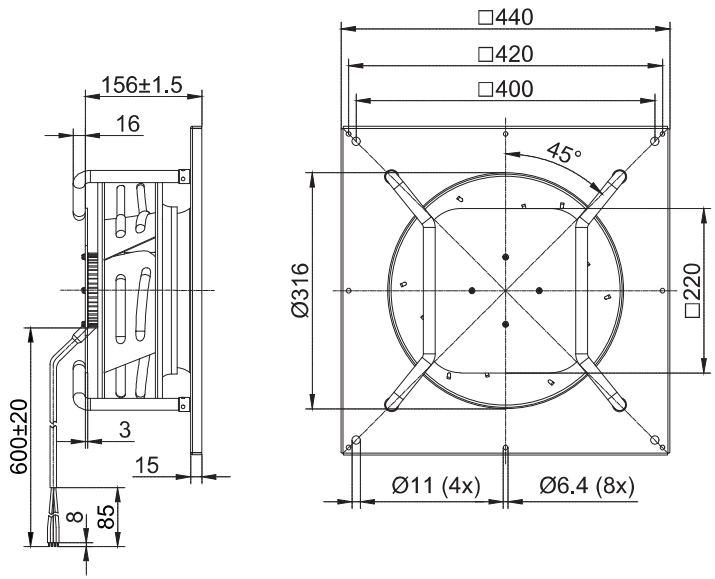

(支架离心风机Centrifugal Fan With Support Bracket)
FK3G310-48AY-20

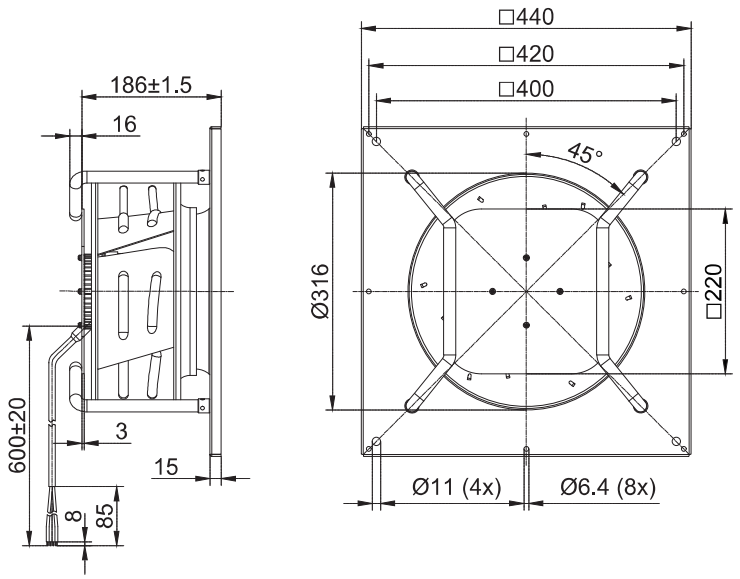

(后向离心风机Centrifugal Fan)
FB3G310-48AY-21

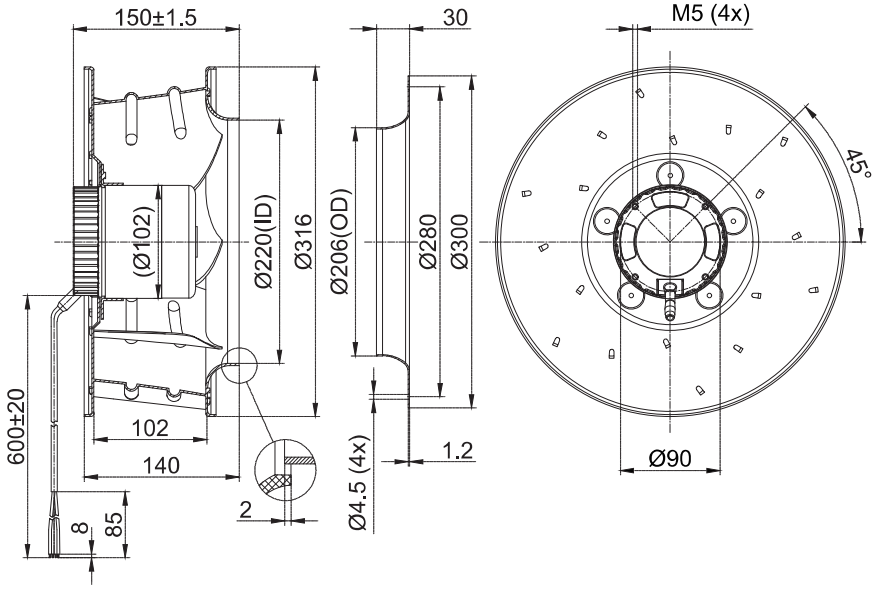

(后向离心风机Centrifugal Fan)
FB3G310-48PK-20

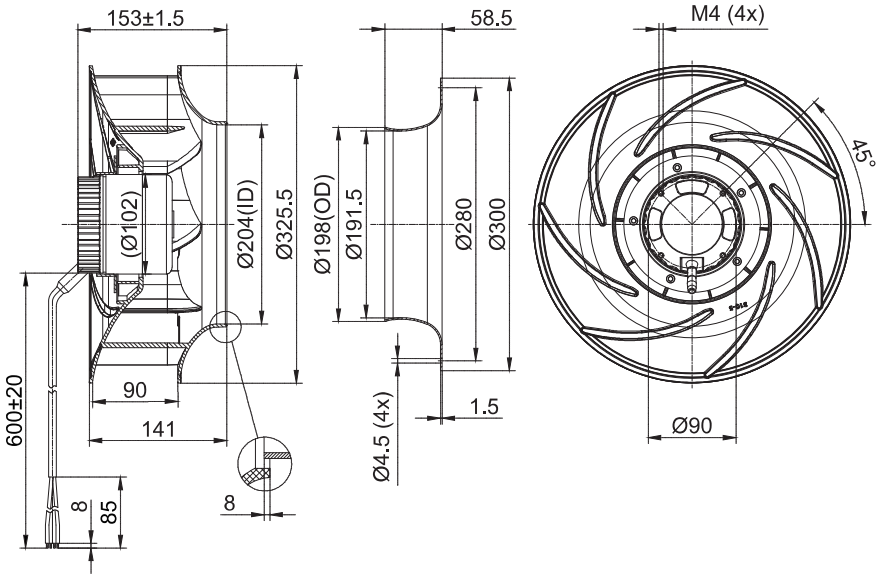

(支架离心风机Centrifugal Fan With Support Bracket)
FK3G310-48AY-21

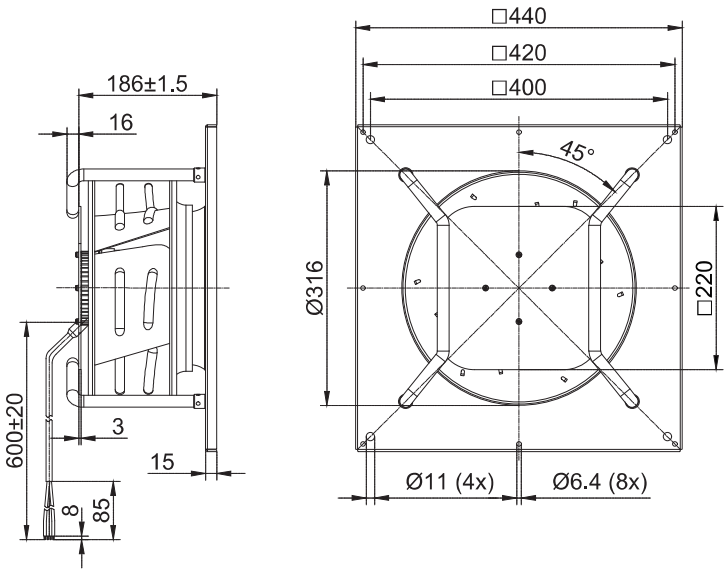

(支架离心风机Centrifugal Fan With Support Bracket)
FK3G310-48PK-20

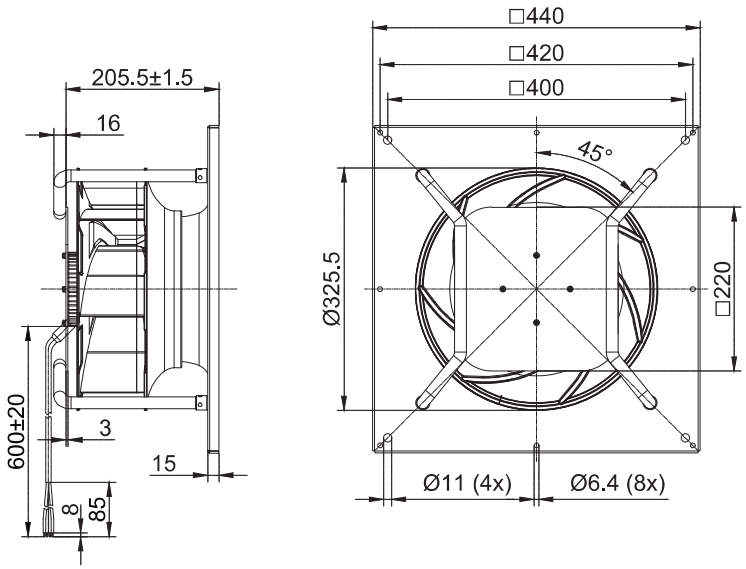



DC Backward Centrifugal Fans D355

– 材料**Material:** 塑料/铝合金 风轮Impeller: Plastic/Aluminium alloy
转子 Rotor: 电泳Electrophoresis
端盖 Electronics housing: 压铸铝Die-cast aluminium
– 叶片数量**Number of blades:** 6/7
– 防护等级**Degree of protection:** IP 44
– 绝缘等级**Insulation class:** B
– 安装位置**Installation position:** 任意Any
– 模式**Mode:**连续工作制 Continuous operation (S1)

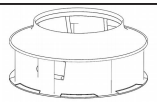	电机 **Motor**	曲线 **Curve**	额定电压 **Nominal Voltage**	额定电压范围 **Nominal Voltage Range**	电流 **Current**	转速 **Speed**	输入功率 **Max. input Power**
Type			VDC	VDC	A	RPM	W
FB3G355-48AL-20	BLDC102	Ⓐ	48	36~57	6.6	2000	320
FB3G355-48AY-20	BLDC102	Ⓑ	48	36~57	3.5	1750	340
FB3G355-48PK-20	BLDC102	Ⓒ	48	36~57	5.2	1450	250

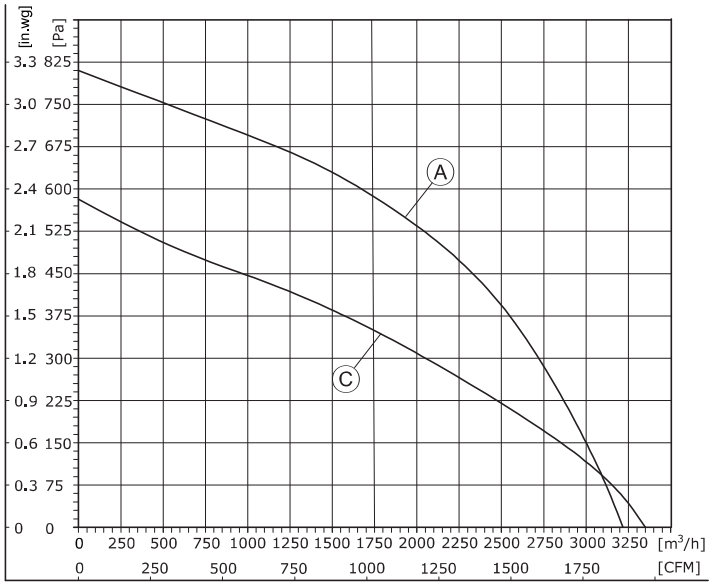

1、Air performance measured according to: ISO 5801, with DJ inlet ring without contact protection.
2、Intake-side sound level: LpA measured at 1 m distance from fan axis. The values given are only applicable under the specifi ed measuring conditions and may differ depending on the installation conditions.

DC Backward Centrifugal Fans D355

– 旋转方向**Direction of rotation:** 正转，从转子方向Clockwise，viewed toward rotor
– 技术特性**Technical features:** 参见附图See connection diagram
– 泄漏电流**Touch curren:** < 3,5 mA
– 能效**Efficiency:** ErP2015
– 标准/证书**Valid For Approval/Standard**：CE,RoHS,ISO9001
环境温度**Perm. ambient temp.**：**.**-25℃~+60℃
– 安装**Mounting:** 免维护滚珠轴承Maintenance-free ball bearings

噪音等级 **Sound Pressure Level**	风量 **Air Flow**	风压 **Air Pressure**	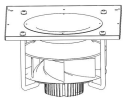	速度控制 **Speed Control**	接线图 **Wiring Mode**
dB(A)	m³/h	Pa	with support bracket		
71	3230	810	FK3G355-48AL-20	0-10VDC PWM Modbus485	S3
70	3350	580	FK3G355-48AY-20		S3
77	3600	580	FK3G310-48PK-20		S3

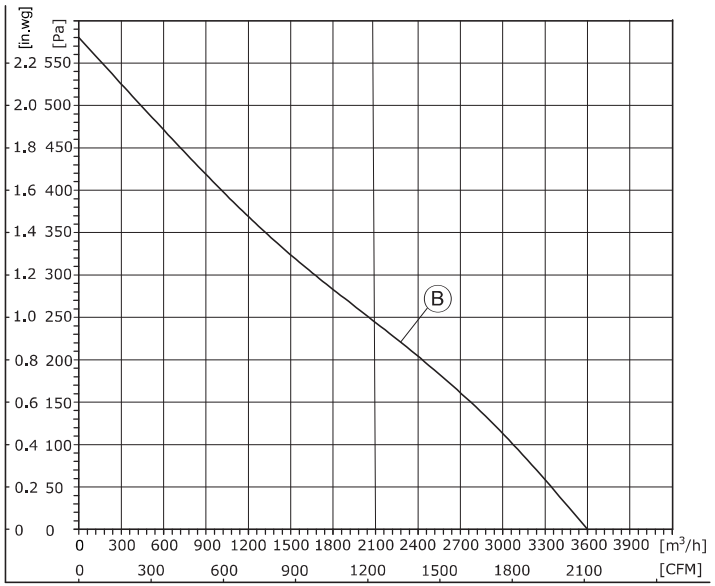

1、Air performance measured according to: ISO 5801, with DJ inlet ring without contact protection.
2、Intake-side sound level: LpA measured at 1 m distance from fan axis. The values given are only applicable under the specifi ed measuring conditions and may differ depending on the installation conditions.

(后向离心风机Centrifugal Fan)
FB3G355-48AL-20

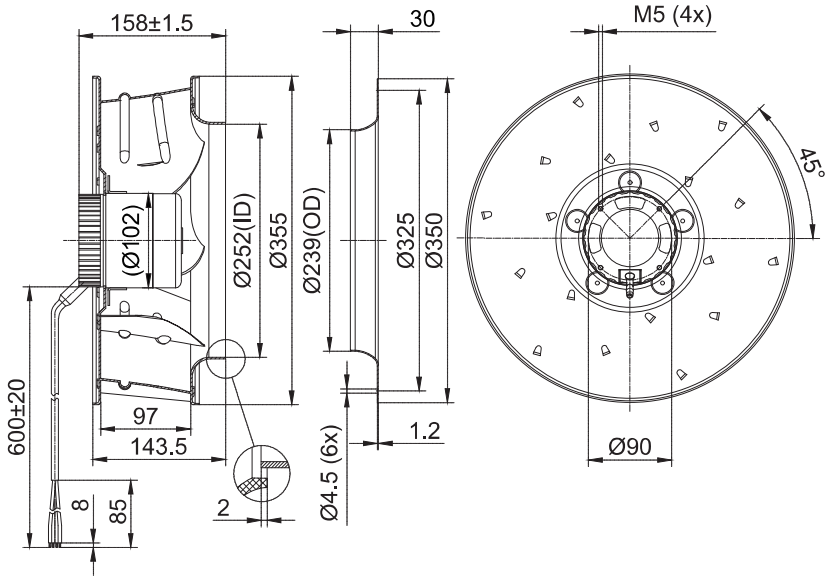

(后向离心风机Centrifugal Fan)
FB3G355-48AY-20

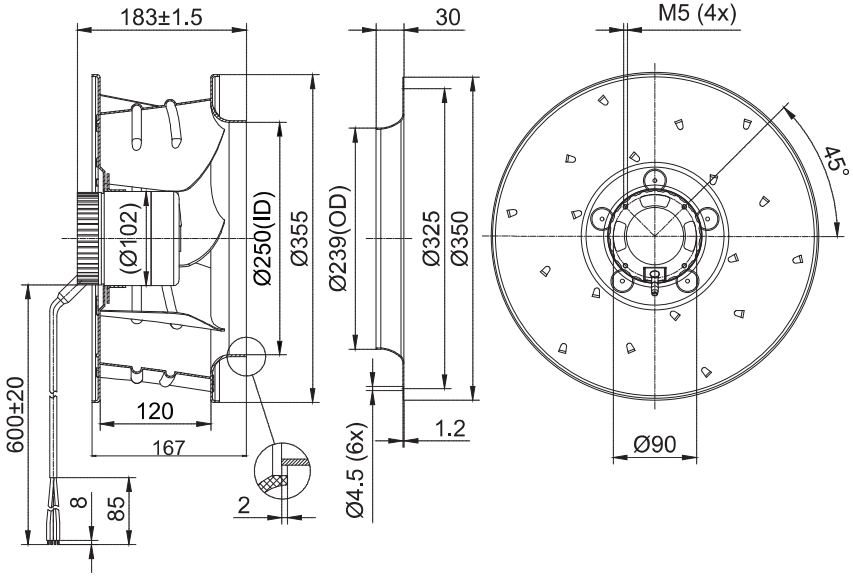

(支架离心风机Centrifugal Fan With Support Bracket)
FK3G355-48AL-20

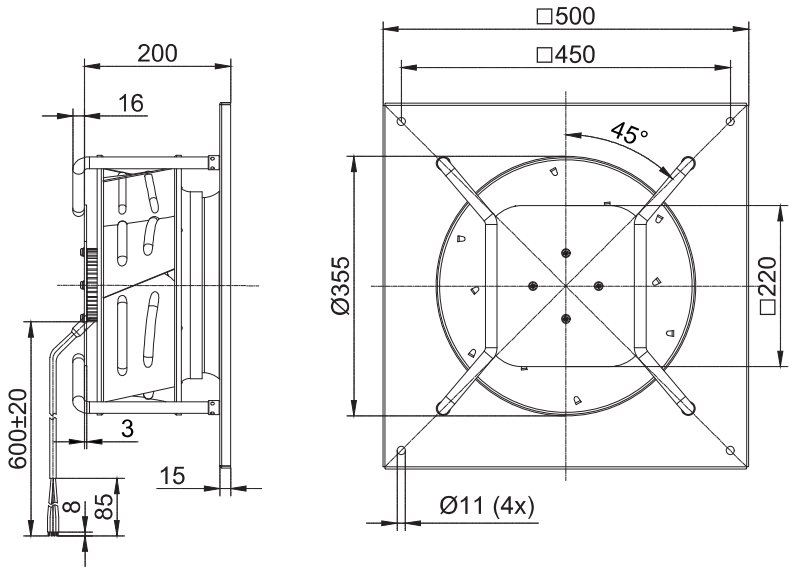

(支架离心风机Centrifugal Fan With Support Bracket)
FK3G355-48AY-20

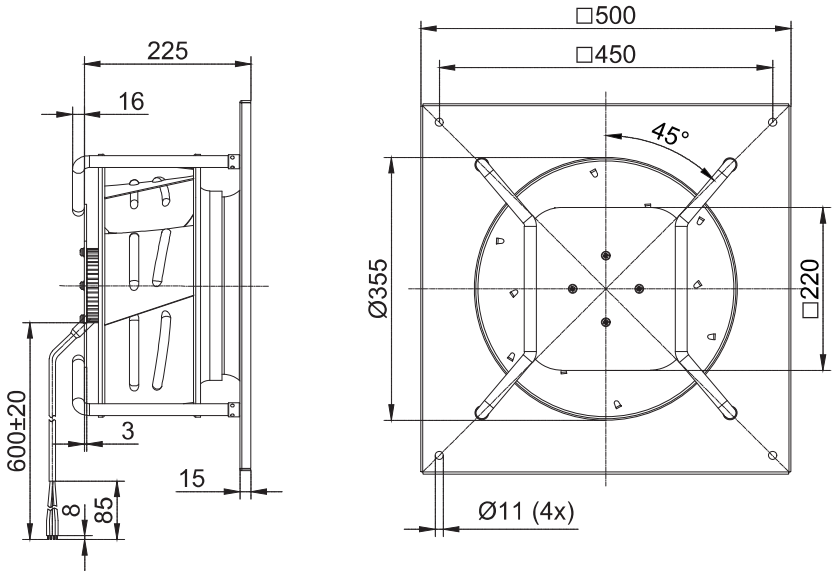

(后向离心风机Centrifugal Fan)
FB3G355-48PK-20

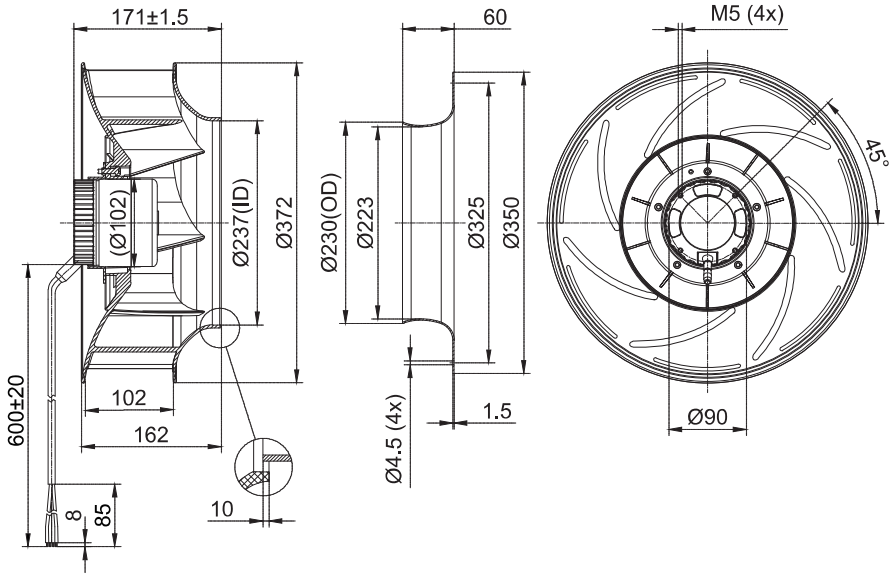

(支架离心风机Centrifugal Fan With Support Bracket)
FK3G355-48PK-20

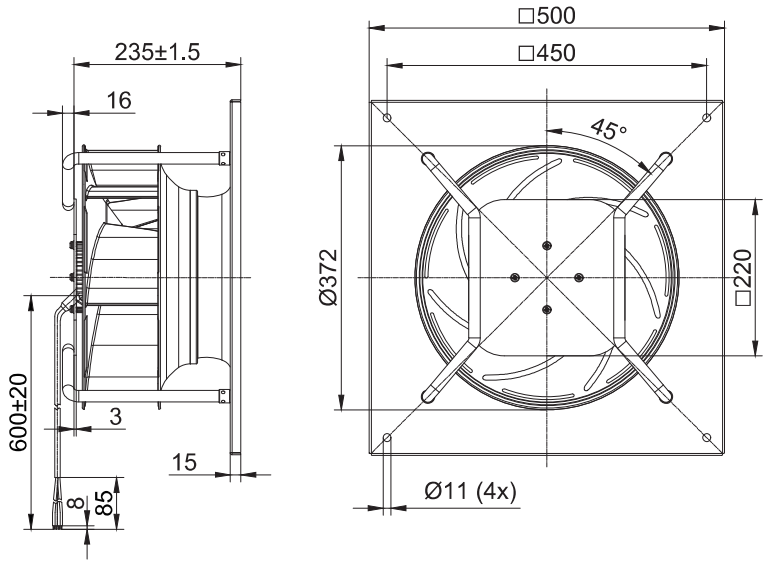



DC Backward Centrifugal Fans D400

– 材料**Material:** 塑料/铝合金 风轮Impeller: Plastic/Aluminium alloy
转子 Rotor: 电泳Electrophoresis
端盖 Electronics housing: 压铸铝Die-cast aluminium
– 叶片数量**Number of blades:** 7
– 防护等级**Degree of protection:** IP 44
– 绝缘等级**Insulation class:** B
– 安装位置**Installation position:** 任意Any
– 模式**Mode:**连续工作制 Continuous operation (S1)

DC Backward Centrifugal Fans D400

– 旋转方向**Direction of rotation:** 正转，从转子方向Clockwise，viewed toward rotor
– 技术特性**Technical features:** 参见附图See connection diagram
– 泄漏电流**Touch curren:** < 3,5 mA
– 能效**Efficiency:** ErP2015
– 标准/证书**Valid For Approval/Standard**：CE,RoHS,ISO9001
环境温度**Perm. ambient temp.**：**.**-25℃~+60℃
– 安装**Mounting:** 免维护滚珠轴承Maintenance-free ball bearings

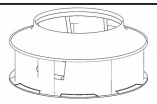	电机 **Motor**	曲线 **Curve**	额定电压 **Nominal Voltage**	额定电压范围 **Nominal Voltage Range**	电流 **Current**	转速 **Speed**	输入功率 **Max. input Power**
Type			VDC	VDC	A	RPM	W
FB3G400-48AP-20	BLDC102	(A)	48	36~57	5.8	1460	275
FB3G400-48PK-20	BLDC102	(B)	48	36~57	5.2	1170	250

噪音等级 **Sound Pressure Level**	风量 **Air Flow**	风压 **Air Pressure**	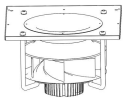	速度控制 **Speed Control**	接线图 **Wiring Mode**
dB(A)	m³/h	Pa	with support bracket		
75.8	4347	609	FK3G400-48AP-20	0-10VDC PWM Modbus485	S3
75	4320	445	FK3G400-48PK-20		S3

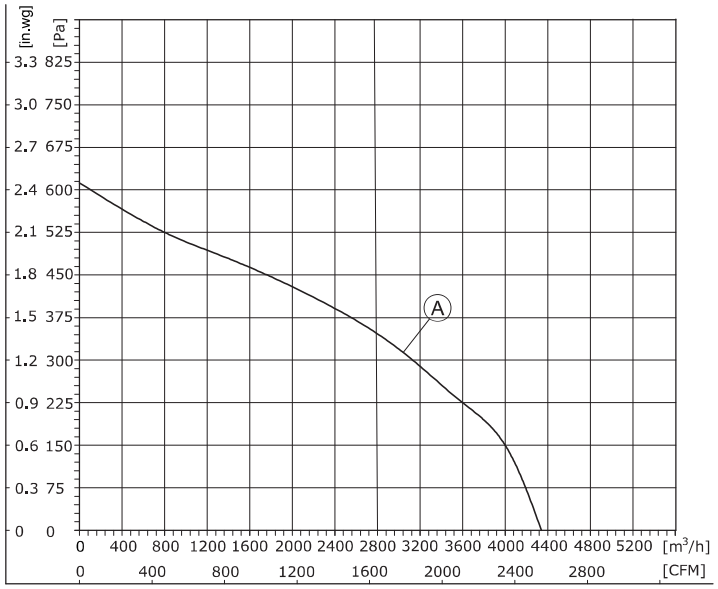

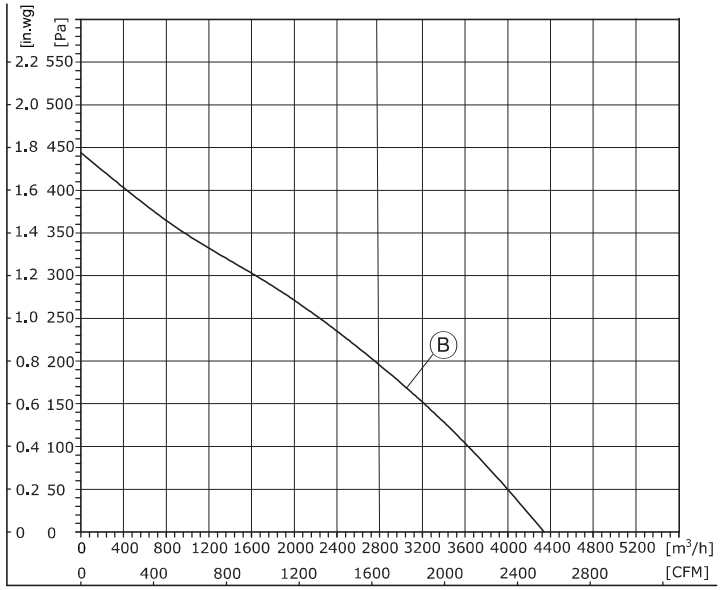

1、Air performance measured according to: ISO 5801, with DJ inlet ring without contact protection.
2、Intake-side sound level: LpA measured at 1 m distance from fan axis. The values given are only applicable under the specifi ed measuring conditions and may differ depending on the installation conditions.

1、Air performance measured according to: ISO 5801, with DJ inlet ring without contact protection.
2、Intake-side sound level: LpA measured at 1 m distance from fan axis. The values given are only applicable under the specifi ed measuring conditions and may differ depending on the installation conditions.

DC Centrifugal Fan

(后向离心风机Centrifugal Fan)
FB3G400-48AP-20

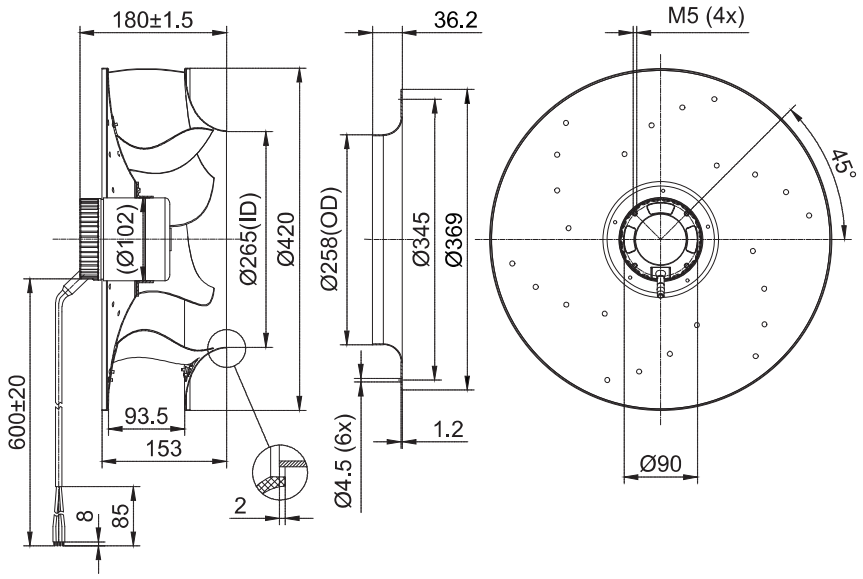

(后向离心风机Centrifugal Fan)
FB3G400-48PK-20

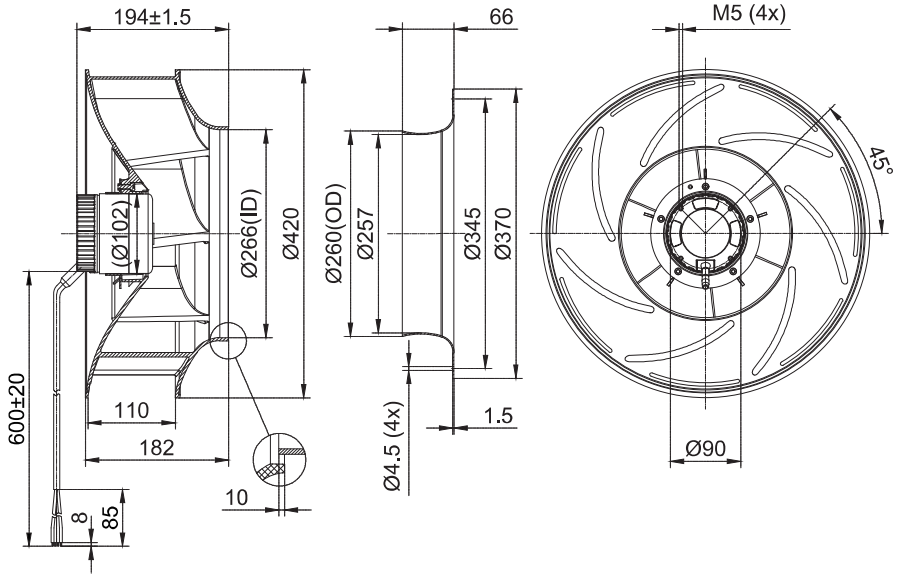

(支架离心风机Centrifugal Fan With Support Bracket)
FK3G400-48AP-20

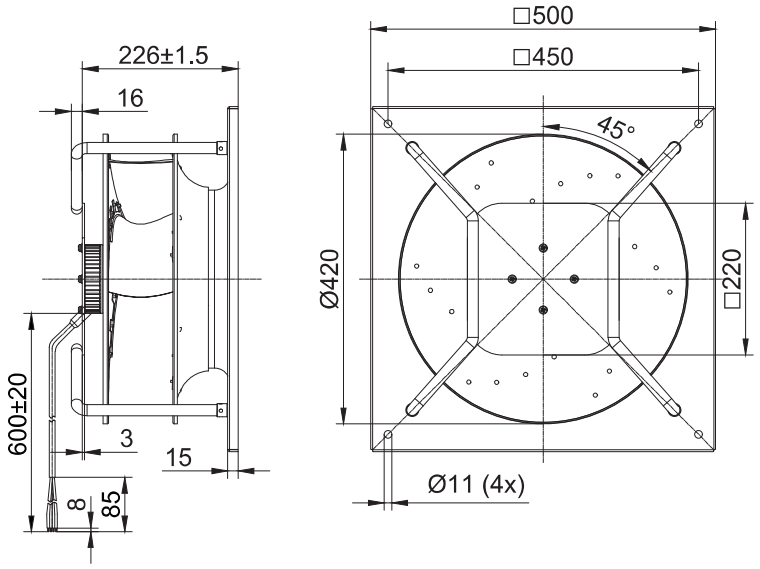

(支架离心风机Centrifugal Fan With Support Bracket)
FK3G400-48PK-20

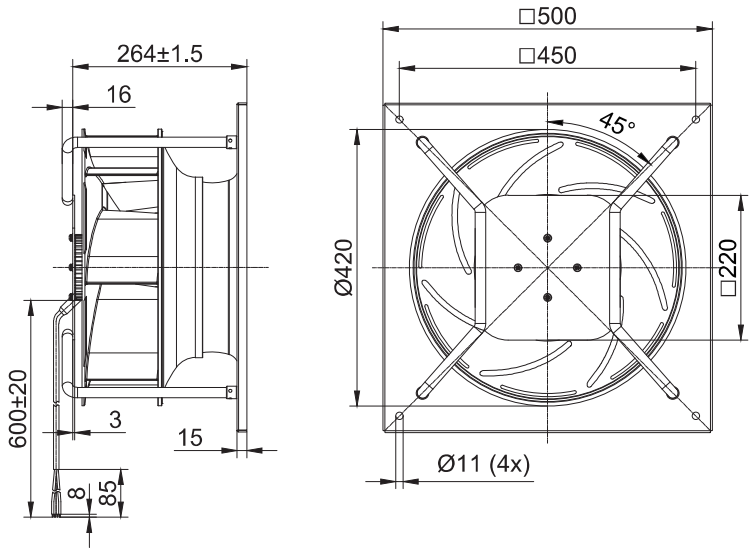



DC Backward Centrifugal Fans D450

– 材料**Material:** 铝合金 风轮Impeller: Aluminium alloy
转子 Rotor: 电泳Electrophoresis
端盖 Electronics housing: 压铸铝Die-cast aluminium
– 叶片数量**Number of blades:** 6
– 防护等级**Degree of protection:** IP 44
– 绝缘等级**Insulation class:** B
– 安装位置**Installation position:** 任意Any
– 模式**Mode:**连续工作制 Continuous operation (S1)

DC Backward Centrifugal Fans D450

– 旋转方向**Direction of rotation:** 正转，从转子方向Clockwise，viewed toward rotor
– 技术特性**Technical features:** 参见附图See connection diagram
– 泄漏电流**Touch curren:** < 3,5 mA
– 能效**Efficiency:** ErP2015
– 标准/证书**Valid For Approval/Standard**：CE,RoHS,ISO9001
环境温度**Perm. ambient temp.**：**.**-25℃~+60℃
– 安装**Mounting:** 免维护滚珠轴承Maintenance-free ball bearings

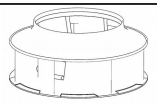	电机 **Motor**	曲线 **Curve**	额定电压 **Nominal Voltage**	额定电压范围 **Nominal Voltage Range**	电流 **Current**	转速 **Speed**	输入功率 **Max. input Power**
Type			VDC	VDC	A	RPM	W
FB3G450-48AL-20	BLDC102	Ⓐ	48	36~57	5.5	1050	265

噪音等级 **Sound Pressure Level**	风量 **Air Flow**	风压 **Air Pressure**	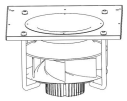	速度控制 **Speed Control**	接线图 **Wiring Mode**
dB(A)	m³/h	Pa	with support bracket		
63	4080	320	FK3G450-48AL-20	0-10VDC PWM Modbus485	S3

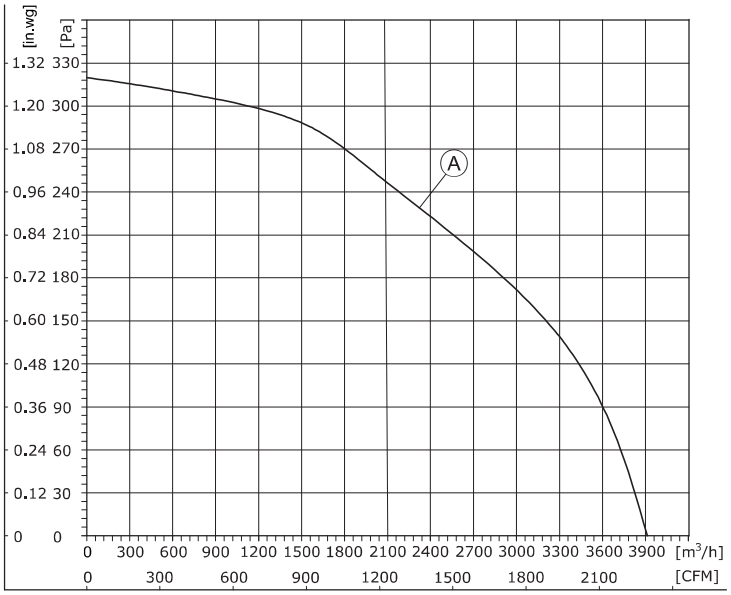

1、Air performance measured according to: ISO 5801, with DJ inlet ring without contact protection.
2、Intake-side sound level: LpA measured at 1 m distance from fan axis. The values given are only applicable under the specifi ed measuring conditions and may differ depending on the installation conditions.

DC Centrifugal Fan

(后向离心风机Centrifugal Fan)
FB3G450-48AL-20

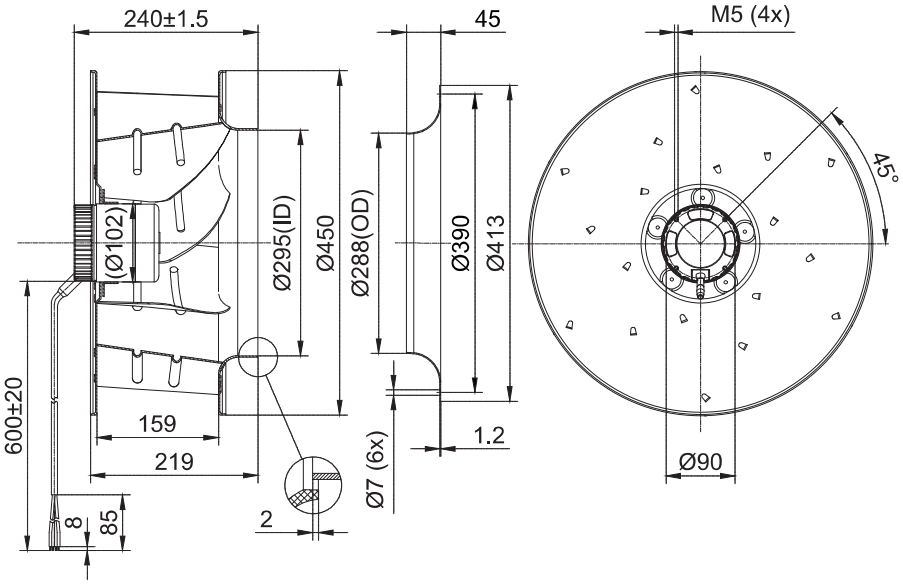

(支架离心风机Centrifugal Fan With Support Bracket)
FK3G450-48AL-20

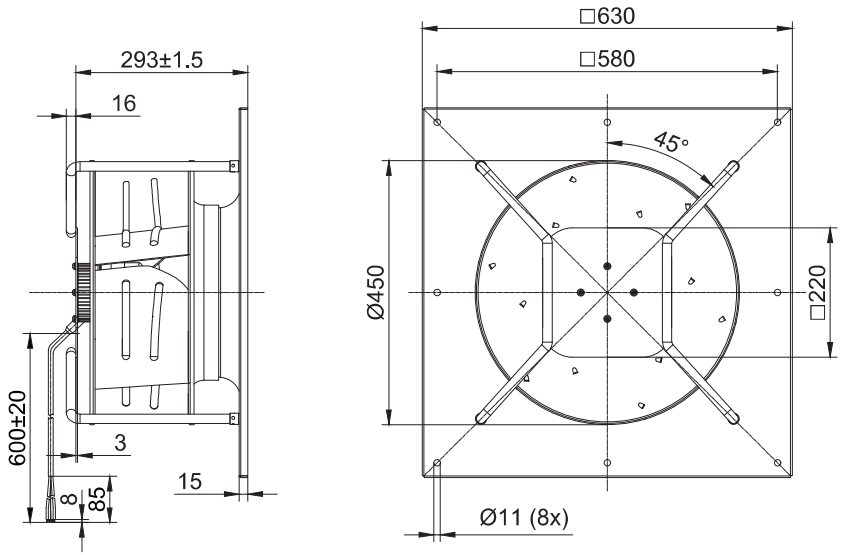








流动的清新，尽享效率之美

A Moveable Freshness

Enjoying The Beauty Of Efficiency To The Fullest

FANOVA

苏州鑫恒鑫电机有限公司

Fanova(Suzhou) Motor Technology Co., LTD

地址/ADD：中国江苏省苏州市相城经济开发区富元路739号7号楼2楼，邮编：215100

2ND FLOOR BUILDING7,NO.739.FUYUAN ROAD ECONOMIC DEVELOPMENT ZONE XIANGCHENG DISTRICT,SUZHOU CITY,JIANGSU PROVINCE,PR.CHINA

电话/TEL：+86 - 512 - 66152110

邮箱/E-MAIL：sales01 @fanova-tech.com 网址/Website：www.fanova-tech.com